PORTER CABLE®

OMNIJIG® JOINERY SYSTEM

Instruction manual

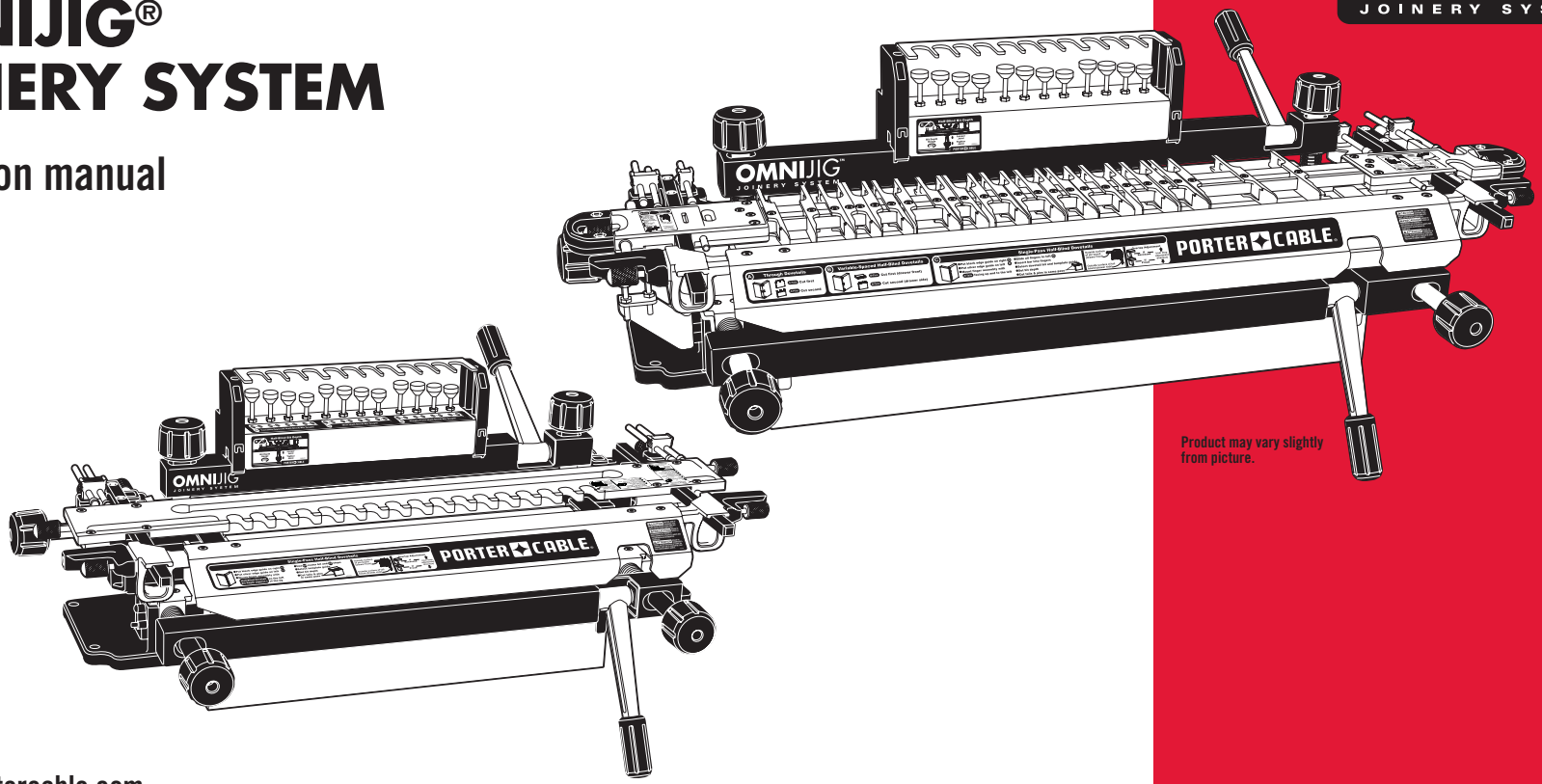

Product may vary slightly from picture.

www.deltaportercable.com

(22428) 55160
(25192) 77240

A24502 - 11-16-07 Rev. A

Copyright © 2007 PORTER-CABLE

RTD10000496AA

OMNIJIG® JOINERY SYSTEM

Models 55160 AND 77240

Safety
General safety rules iv
Router safety iv
OMNIJIG® JOINERY SYSTEM safety iv

Introduction
Joinery overview 2
Standard OMNIJIG® parts 3
OMNIJIG® accessories 4
Familiarization 6
Wood preparation 7
Project layout 7
Board lengths 8
Tips for making drawers and boxes 9

Basic Operations
Setting up the OMNIJIG® 12
Bench mounting 13
Router bit depth pod 13
Instructional DVD 13
Typical omnijig adjustments 14
Placing and sizing stops 14
Removing and replacing templates 14
Accessory templates 15
Edge guides 15
Mounting the wood 15
Variable fingers 16
Selecting bits and template guides 17
Setting router bit depth and making the cut 17
O-ring installation 17
Dovetail setup guide 18
Through dovetails
Variable-spaced half-blind dovetails
Narrow pins
Single pass half-blind dovetails
Router bit depth pod 19
User defined gauges on 24" and 16”
How to select the proper gauge
Making cuts 20
Safe cutting
Tip for reducing tear-out during cuts
Accessories 20
Dust collection 20
Storage case positioning 21
Appendix 66-67

Applications

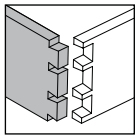

Through Dovetails
23

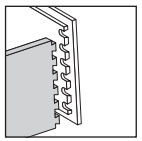

Rabbeted Half-Blind Dovetails
45

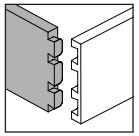

Variable-Spaced Half-Blind Dovetails
31

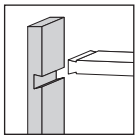

Sliding Tapered Dovetails
51

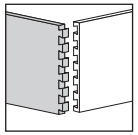

Single-Pass Half-Blind Dovetails
39

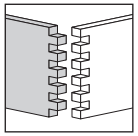

Box Joints
59

A NOTE ABOUT USING THE OMNIJIG®
Though the OMNIJIG® is designed to make quality joinery from the start, we strongly suggest you practice cutting and fitting several joints using scrap wood. This will build up your confidence in the jig and in your own abilities. This fitting process may also require that you make adjustments to the template stops and/or router bit depth gauges to achieve your desired joint fit for your application. At the end of each chapter there are tips that detail these adjustments.

PORTER CABLE®

4825 Highway 45 North • Jackson, TN 38305
1.888.848.5175 • deltaportercable.com/jigs

⚠WARNING Read and understand all instructions. Failure to follow all instructions listed below, may result in electric shock, fire and/or serious personal injury.

⚠WARNING There are certain applications for which this tool was designed. Do not modiy and/or use for any applications other than for which it was designed. If you have any questions relative to its application DO NOT use the tool until you have written PORTER-CABLE and we have advised you. You can write to Technical Service Manager; PORTER-CABLE; 4825 Highway 45 North; Jackson, TN 38305.

SAVE THESE INSTRUCTIONS

GENERAL SAFETY RULES

1. **KEEP WORK AREA CLEAN.** Cluttered areas and benches invite injuries.
2. **AVOID DANGEROUS ENVIRONMENT.** Don't expose power tools to rain. Don't use power tools in damp or wet locations. Keep area well lit. Avoid chemical or corrosive environment. Do not use tool in presence of flammable liquids or gases.
3. **GUARD AGAINST ELECTRIC SHOCK.** Prevent body contact with grounded surfaces. For example: pipes, radiators, ranges, refrigerator enclosures.
4. **KEEP CHILDREN AWAY.** Do not let visitors contact tool or extension cord. All visitors should be kept away from work area.
5. **STORE IDLE TOOLS.** When not in use, tools should be stored in dry, and high or locked-up place – out of reach of children.
6. **DON'T FORCE TOOL.** It will do the job better and safer at the rate for which it was intended.
7. **USE RIGHT TOOL.** Don't force small tool or attachment to do the job of a heavy duty tool. Don't use tool for purpose not intended – for example – do not use a circular saw for cutting tree limbs or logs.
8. **DRESS PROPERLY.** Do not wear loose clothing or jewelry. Loose clothing, draw strings and jewelry can be caught in moving parts. Rubber gloves and non-skid footwear are recommended when working outdoors. Wear protective hair covering to contain long hair.
9. **USE ANSI Z87.1 SAFETY GLASSES.** Wear safety glasses or goggles while operating power tools. Also face or dust mask if operation creates dust. All persons in the area where power tools are being operated should also wear safety glasses and face or dust mask.
10. **WEAR ANSI S3.19 EAR PROTECTION** to safeguard against possible hearing loss.
11. **DON'T ABUSE CORD.** Never carry tool by cord or yank it to disconnect from receptacle. Keep cord from heat, oil, and sharp edges. Have damaged or worn power cord and strain reliever replaced immediately. DO NOT ATTEMPT TO REPAIR POWER CORD.
12. **SECURE WORK.** Use clamps or a vise to hold work. It's safer than using your hand and it frees both hands to operate tool.
13. **DON'T OVERREACH.** Keep proper footing and balance at all times.
14. **MAINTAIN TOOLS WITH CARE.** Keep tools sharp and clean for better and safer performance. Follow instructions for lubricating and changing accessories. Inspect tool cords periodically and if damaged, have repaired by authorized service facility. Inspect extension cords periodically and replace if damaged. Have all worn, broken or lost parts replaced immediately. Keep handles dry, clean and free from oil and grease.
15. **DISCONNECT TOOLS** when not in use, before servicing, and when changing accessories such as blades, bits, cutters, etc.
16. **REMOVE ADJUSTING KEYS AND WRENCHES.** Form habit of checking to see that keys and adjusting wrenches are removed from the tool before turning it on.
17. **AVOID UNINTENTIONAL STARTING.** Do not carry a plugged-in tool with finger on switch. Be sure switch is off when plugging in. Keep hands, body and clothing clear of blades, bits, cutters, etc. when plugging in the tool.
18. **STAY ALERT.** Watch what you are doing. Use common sense. Do not operate tool when you are tired or while under the influence of medication, alcohol or drugs.
19. **CHECK DAMAGED PARTS.** Before further use of the tool, a guard or other part that is damaged should be carefully checked to determine that it will operate properly and perform its intended function. Check for alignment of moving parts, binding of moving parts, breakage of parts, mounting, and any other conditions that may affect its operation. A guard or other part that is damaged should be properly repaired or replaced by an authorized service center unless otherwise indicated elsewhere in this instruction manual. Have defective switches replaced by an authorized service center. Do not use tool if switch does not turn it on and off.

ROUTER SAFETY RULES

⚠WARNING: Wear appropriate hearing protection during use [ANSI S12.6 (S3.19)]. Under some conditions and duration of use, noise from this product may contribute to hearing loss.

⚠WARNING: Some dust created by power sanding, sawing, grinding, drilling, and other construction activities contains chemicals known to cause cancer, birth defects or other reproductive harm. Some examples of these chemicals are:

- lead from lead-based paint.
- crystalline silica from bricks and cement and other masonry products.
- arsenic and chromium from chemically-treated lumber (CCA).

Your risk from these exposures varies, depending on how often you do this type of work. To reduce your exposure to these chemicals: work in a well ventilated area, and work with approved safety equipment, such as those dust masks that are specially designed to filter out microscopic particles.

⚠WARNING: Avoid prolonged contact with dust from power sanding, sawing, grinding, drilling, and other construction activities. Wear protective clothing and wash exposed areas with soap and water. Allowing dust to get into your mouth, eyes, or lay on the skin may promote absorption of harmful chemicals.

⚠WARNING: Use of this tool can generate and/or disburse dust, which may cause serious and permanent respiratory or other injury. Always use NIOSH/OSHA approved respiratory protection appropriate for the dust exposure. Direct particles away from face and body.

⚠WARNING: ALWAYS USE SAFETY GLASSES. Everyday eyeglasses are NOT safety glasses. Also use face or dust mask if cutting operation is dusty. ALWAYS WEAR CERTIFIED SAFETY EQUIPMENT:

- ANSI Z87.1 eye protection (CAN/CSA Z94.3)
- ANSI S12.6 (S3.19) hearing protection
- NIOSH/OSHA/MSHA respiratory protection

- Hold tool by insulated gripping surfaces when performing an operation where the cutting tool may contact hidden wiring or its own cord. Contact with a "live" wire will make exposed metal parts of the tool "live" and shock the operator.
- Use clamps or another practical way to secure and support the workpiece to a stable platform. Holding the work by hand or against your body leaves it unstable and may lead to loss of control.
- Metal cutting with router: If using router for metal cutting, clean out tool often. Metal dust and chips often accumulate on interior surfaces and could create a risk of serious injury, electrical shock or death.
- Never run the motor unit when it is not inserted in one of the router bases. The motor is not designed to be handheld.
- Keep handles dry, clean, and free from oil and grease. This will enable better control of the tool.
- Keep hands away from cutting area. Never reach under the workpiece for any reason. Keep the router base firmly in contact with the workpiece when cutting. Hold the router only by the handles. These precautions will reduce the risk of personal injury.
- Use sharp cutters. Dull cutters may cause the router to swerve or stall under pressure.
- Never touch the bit immediately after use. It may be extremely hot.
- Be sure that the motor has stopped completely before you lay the router down. If the cutter head is still spinning when the tool is laid down, it could cause injury or damage.
- Be sure that the router bit is clear of the workpiece before starting the motor. If the bit is in contact with the workpiece when the motor starts it could make the router jump, causing damage or injury.
- Do not press spindle lock button while the motor is running. Doing so can damage the spindle lock.

OMNIJIG® JOINERY SYSTEM SAFETY RULES

⚠WARNING: To reduce the risk of injury, when making cuts:

- Read and understand all instructions related to operating the OMNIJIG® JOINERY SYSTEM and making your desired joint.
- Be sure all fasteners (knobs, screws, etc.) on the OMNIJIG® have been tightened following any adjustments.
- Be sure the template stops are in place.
- Use both hands on the router while making the cut
- Be sure the wood being cut is secured by the appropriate workpiece clamp.
- After making a cut and turning the router off, do not move the router or your hands until the router bit stops spinning.
- Disconnect router from power after making a cut, while making any adjustments or while moving wood on and off the jig.
- If sawdust piles up at your feet, be sure to clean it away from the work area to avoid slipping on it.
- Do not raise router off the jig while it is still running. The spinning bit could damage the fingers and cause sparks.
- Be careful when handling variable finger templates because of the sharp fingers.

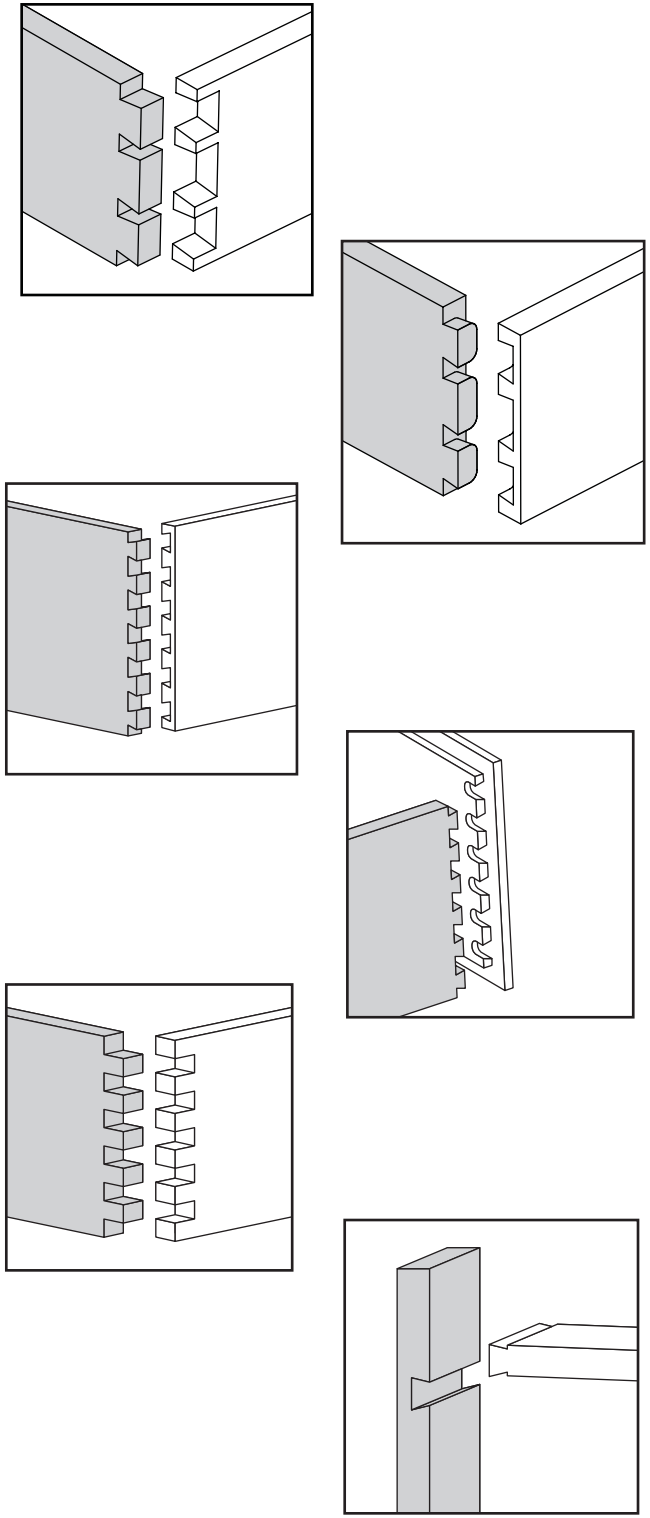

Introduction

This chapter gives you some background knowledge of dovetail and other joints and how to prepare the wood for a successful project. We'll also explain the basic parts of the OMNIJIG® JOINERY SYSTEM and tell you about accessories that can add functionality to your OMNIJIG®.

JOINERY OVERVIEW

The dovetail joint is a traditional joint which dates all the way back to the ancient Egyptians. It is both strong and visually appealing. This joint has flared protrusions (tails) (A) Fig. 1 that are cut into one board ("tailboard") and protrusions with slanted sides (pins) (B) that are cut in the other board ("pinboard"). In drawer construction, the drawer front is the pinboard and drawer side is the tailboard.

When the two pieces are joined, the tails and pins lock together mechanically. Pulling on the drawer front will pull the drawer side as well without the need for fasteners (screws, nails, etc.). Since the pins and tails have a sufficient amount of surface, the joint is made even stronger by glue.

Types of dovetails include through dovetails (Fig. 2), variable-spaced half-blind dovetails (Fig. 3), single-pass half-blind dovetails (Fig. 4) and rabbeted half-blind dovetails (Fig. 5).

A similar joint, called a box joint (Fig. 6), has straight protrusions called fingers on both boards. This joint is used on jewelry boxes and other small boxes. The box joint is strong because it has a large surface area for glue.

The Dovetail Dado, or Sliding Tapered Dovetail (Fig. 7), consists of a dovetail-shaped dado (C) in one board and a dovetail-shaped tenon (D) in the other board.

NOTE: This manual includes instructions for these basic dovetail jig operations. Please visit our Web Site at www.deltaportercable.com/jigs for the supplementary manual that gives instruction for more advanced procedures.

8:1 DOVETAIL RATIO

The traditional angle for dovetails in hardwood is to cut them at ratio of 8 to 1, which equates to an angle of 7.1 degrees. In order to be historically accurate, the OMNI-JIG® JOINERY SYSTEM was designed to match this ratio. As Dovetail bits are measured in angles and not ratios, 7 degrees (Fig. 8) was selected for the system. Fig. 8 shows a cross-section of a typical tail.

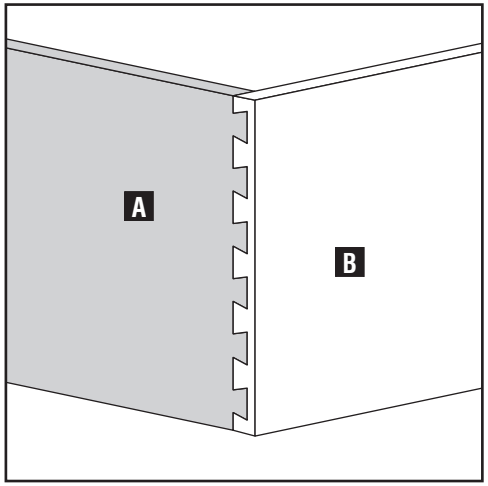

Fig. 1

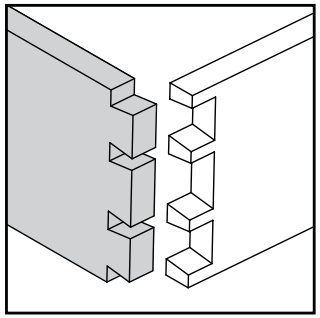
Fig. 2

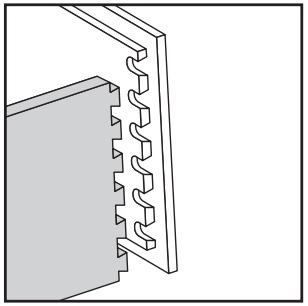
Fig. 5

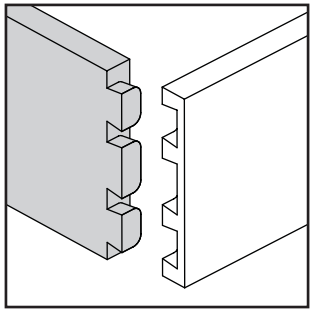
Fig. 3

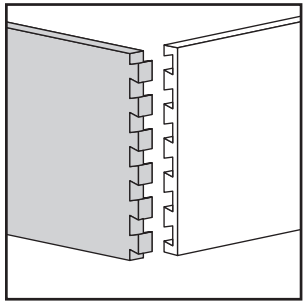
Fig. 4

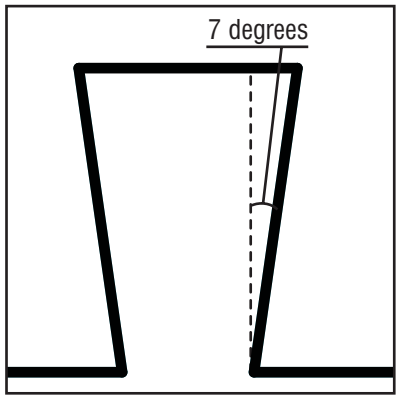

Fig. 8

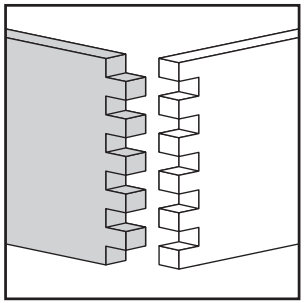
Fig. 6

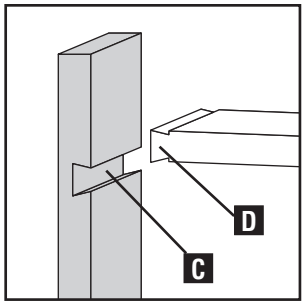

Fig. 7

STANDARD OMINJIG® PARTS

The OMNIJIG® comes standard with various bits, template guides, stops and a template.

- **The 24" OMNIJIG®** comes standard with a variable finger template that is used to cut through dovetails and half-blind dovetails (variable and single-pass).
- **The 16" OMNIJIG®** comes standard with a single-pass half-blind/sliding tapered dovetail template that is used to cut single-pass half-blind joints and the sliding tapered dovetail dado.

Standard equipment for each is shown here.

77240: 24" OMNIJIG SYSTEM

1. Jig base
2. 24" variable finger template
3. Instructional DVD
4. Left and right stops (labeled A4, B1, C1)
5. Dovetail bit (labeled D4)
6. Straight bit (labeled S2)
7. Square screwdriver
8. Wrench
9. Template guides, G0 (85/128"), G1 (5/8"), G2 (39/64"), G3 (19/32"), G4 (37/64"), G5 (9/16") and G6 (15/32")
10. Lock nuts (for all template guides)
11. Router bit depth pod
12. Stabilizer bar
13. Two rubber O-rings
14. Dovetail setup guide (not shown)

55160: 16" OMNIJIG SYSTEM

1. Jig base
2. 16" single-pass half-blind/sliding tapered dovetail template
3. Instructional DVD
4. Left and right stops (labeled C2)
5. Dovetail bit (labeled D4)
6. Square screwdriver
7. Wrench
8. Template guides, labeled G2 (39/64"), G3 (19/32"), G4 (37/64") and G5 (9/16")
9. Lock nut (for all template guides)
10. Stabilizer bar
11. Router bit depth pod
12. Two rubber O-rings

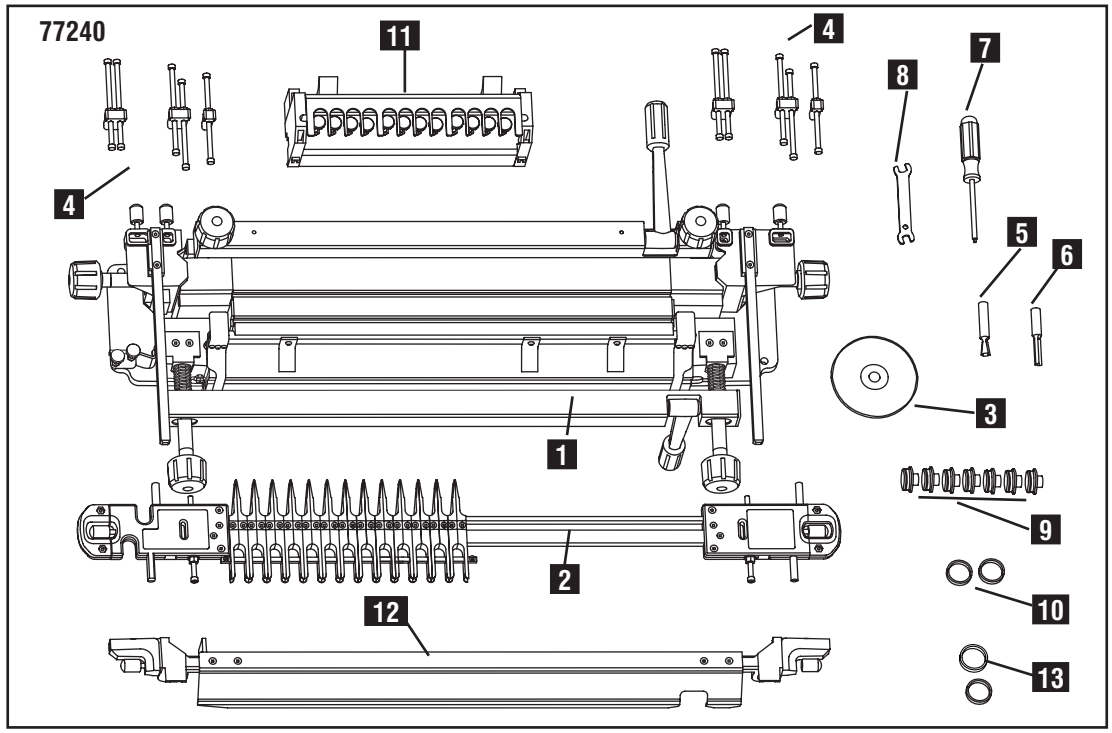

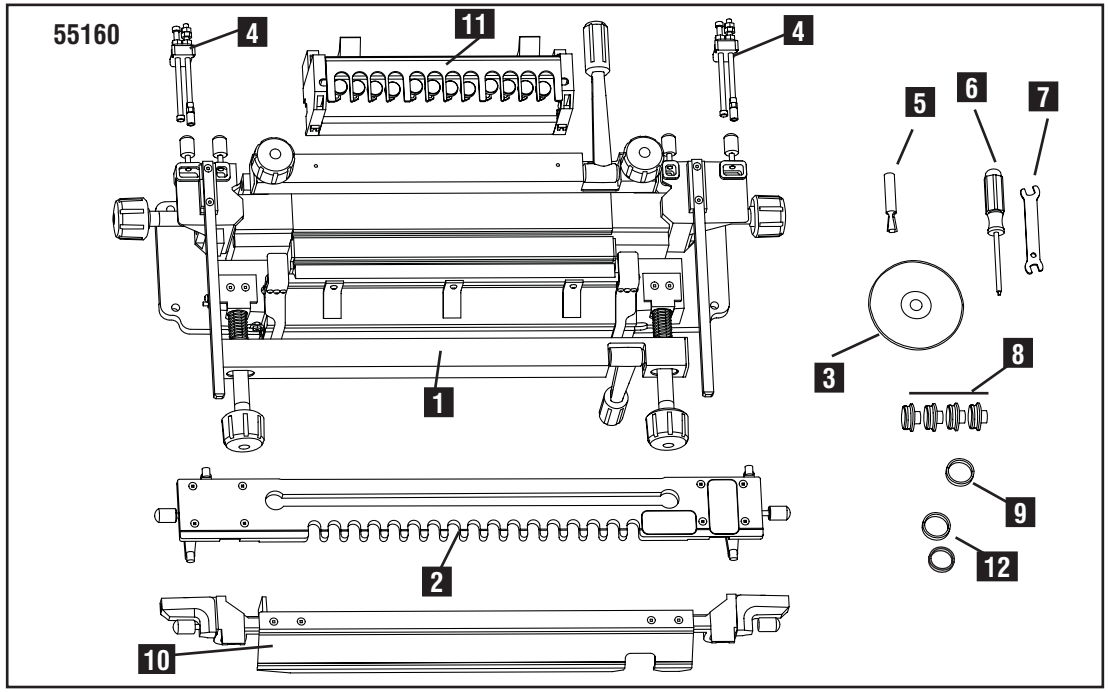

OMNIJIG® ACCESSORIES

An accessory kit available for the OMNIJIG® can help you cut box joints (16" or 24"). In addition, different templates are available: a 16" variable finger template; a 24" single-pass half-blind/ sliding tapered dovetail template; and 24" and 16" miniature variable finger templates. The miniature templates are designed to cut smaller workpieces for more decorative joints.

Here's what is included in each accessory package. The catalog numbers for each size are included below.

Box joint accessory kits (Fig. 9)
77245 *(For use with the 16" and 24" variable finger templates, 77241 or 55161)*
55165 *(For use with the 16" and 24" miniature finger templates, 77246 or 55166)*

77245
1. Straight bit (S3)
2. Two sets of double stops ("Box left" and "Box right")
3. 5 template guides (G3.1, G3.2, G3.3, G3.4 and G3.5)
4. Box Joint Setup Guide (not shown)

55165
1. Straight Bit (S0)
2. Two sets of double stops ("Mini Box left" and "Mini Box right")
3. 7 Template Guides (G6, G6.1, G6.2, G6.3, G6.4, G6.5, G9)
4. Box Joint Setup Guide (not shown)

Single-pass half-blind/sliding tapered dovetail template (Fig. 10)
(24" - 77248; 16" - 55168)
1. Template
2. Left and right stops (labeled C2)

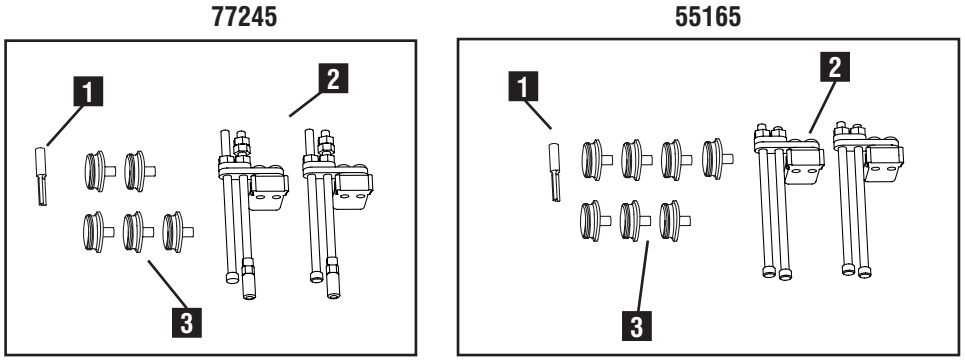

Fig. 9

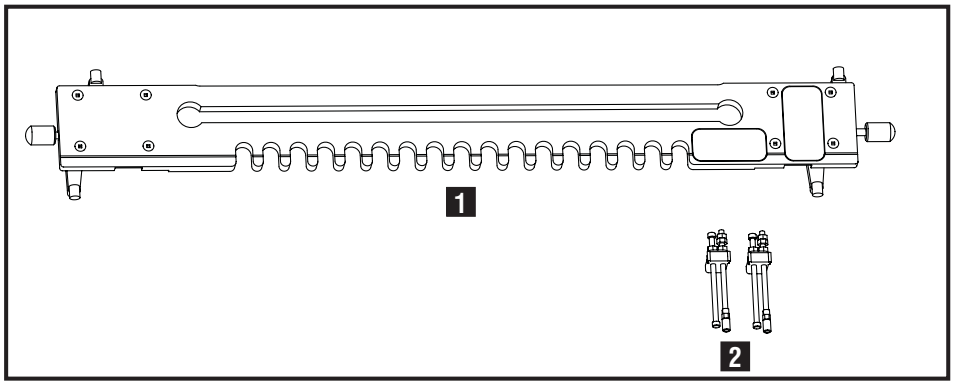

Fig. 10

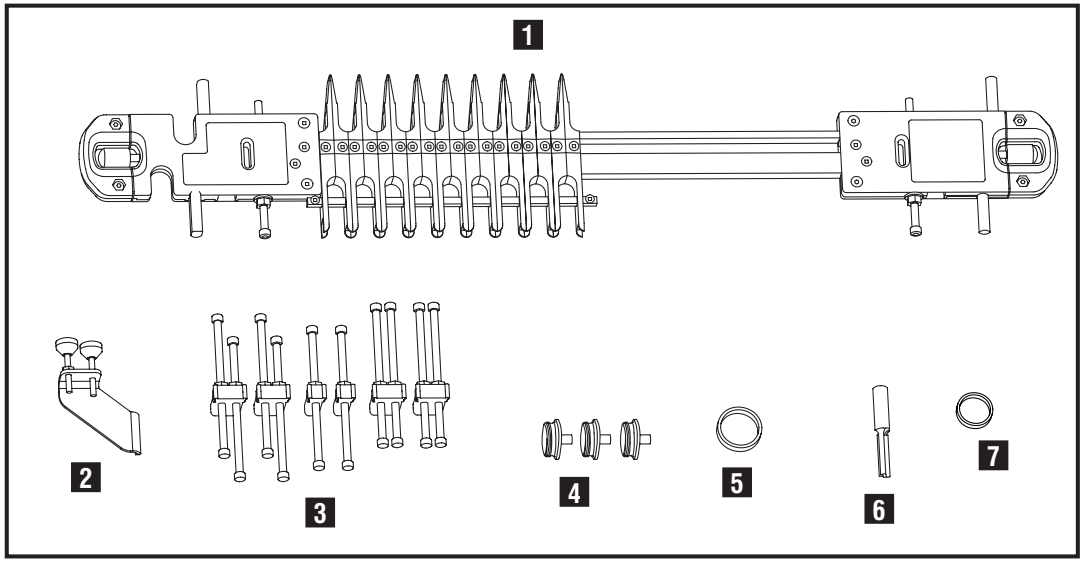

Fig. 11

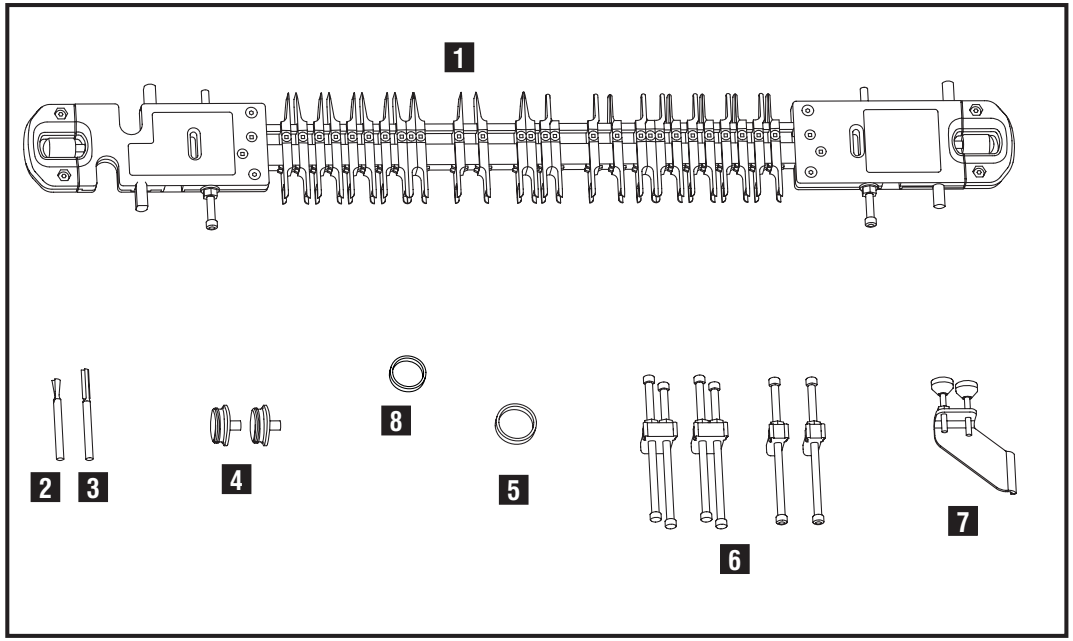

Fig. 12

NOTE: Other router bits and other accessories (dust collection adapter, storage box for tools, etc.) are available to expand the capabilities of your OMNIJIG®. Contact your nearest PORTER-CABLE dealer for more information.

Variable finger template (Fig. 11)
(24" - 77241; 16" - 55161)

1. Template
2. Router bit depth gauges
3. Left and right stops (labeled A4, B1 and C1)

(FOR 55161 ONLY:)

4. Template guides, one labeled G1 (5/8"), one labeled G6 (15/32") and one labeled G0 (85/128")
5. Lock nut for template guides
6. Straight bit (labeled S2)
7. One rubber O-ring
8. Dovetail setup guide (not shown)

Miniature variable finger template (Fig. 12)
(24" - 77246; 16" - 55166)

1. Template
2. Dovetail bit (labeled D1)
3. Straight bit (labeled S1)
4. Template guides, one labeled G7 (3/8") and one labeled G8 (23/64")
5. Lock nut for template guides
6. Left and right stops (labeled A8 and B2)
7. Router bit depth gauge
8. One rubber O-ring
9. Dovetail setup guide (not shown)

SPECIFICATIONS OF ROUTER BITS INCLUDED IN VARIOUS BASE UNITS AND ACCESSORIES:

Router Bits	Cutting Diameter	Flute Length	Shank Length
D0	1/4"	13/32"	1/4"
D1	9/32"	17/32"	1/4"
D2	5/16"	21/32"	1/4"
D3	3/8"	25/32"	1/2"
D4	1/2"	25/32"	1/2"
D5	9/16"	1-1/32"	1/2"
D6	3/4"	1-17/32"	1/2"
S0	9/32"	25/32"	1/4"
S1	1/4"	21/32"	1/4"
S2	3/8"	1-17/32"	1/2"
S3	31/64"	1-17/32"	1/2"

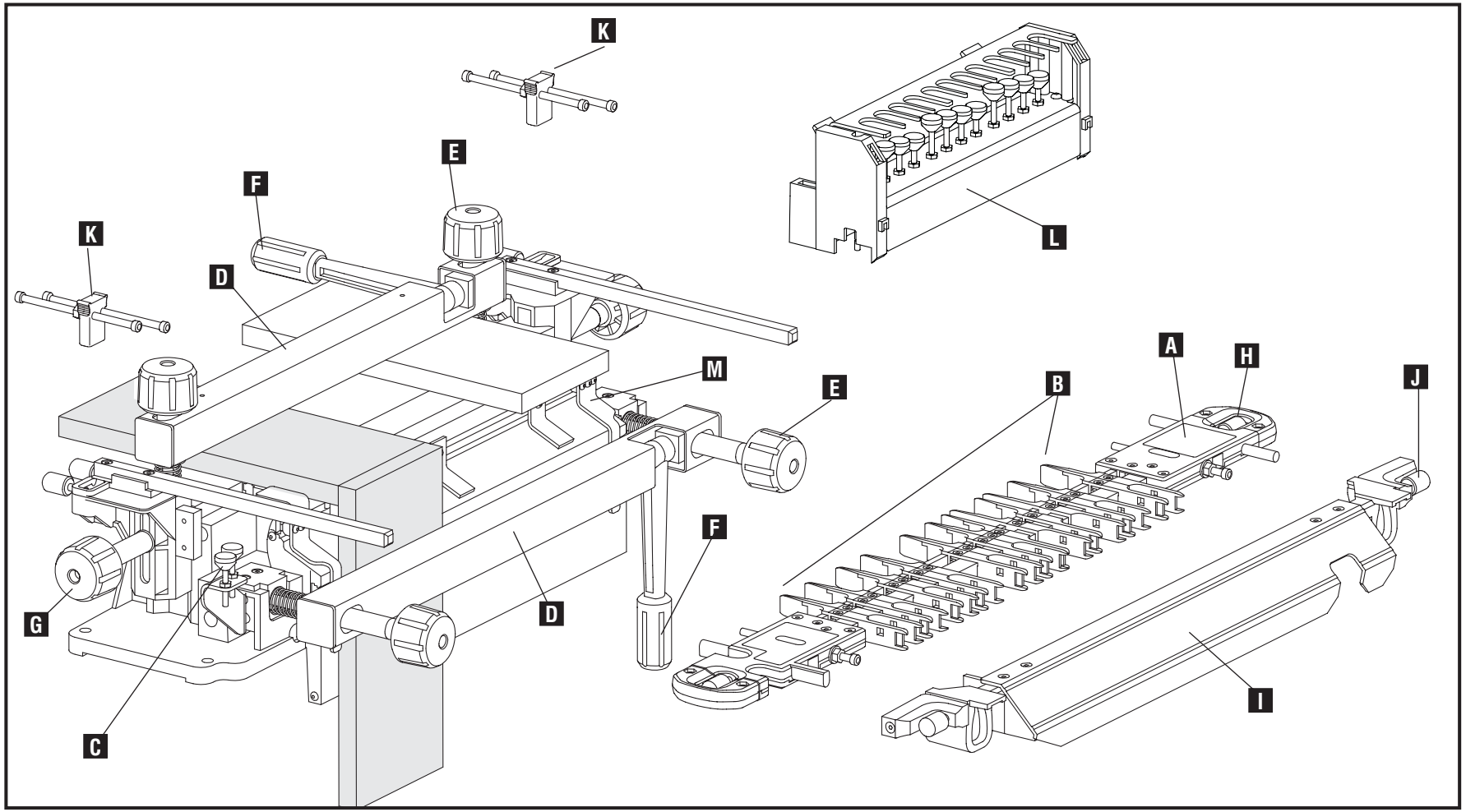

FAMILIARIZATION

You need to be familiar with the basic parts of the OMNIJIG®. This picture above shows standard items that come with the 24" OMNIJIG®.
The basic parts include:

A. Template
B. Finger set. These are either variable fingers (as shown) or fixed (not shown).
C. Router bit depth gauge
D. Workpiece clamping bar (horizontal and vertical)
E. Workpiece clamping bar lock knobs (horizontal and vertical)
F. Workpiece clamping lever (horizontal and vertical)
G. Template mounting rod lock knobs
H. Template lock knobs
I. Stabilizer bar
J. Stabilizer bar lock knobs
K. Stops
L. Router bit depth pod
M. Edge guides (black and silver)

WOOD PREPARATION

Properly preparing the materials for your project is the key to good-looking and tight-fitting joints. You must cut your wood at perfect right angles (Fig. 13). Cuts that are off even one degree will not align correctly (Fig. 14).

Also, your workpieces must be flat and not cupped. Orient your wood so that end grain is joined to end grain (Fig. 15) to make the joint strong. Using the long grain (Fig. 16) in the workpiece will result in a weak joint.

⚠WARNING: INSPECT MATERIALS FOR DEFECTS. Knots and splinters can be thrown with great force. Make sure defective materials are not used on the OMNIJIG®.

PROJECT LAYOUT

Keeping track of the outer and inner face of each workpiece and how the different parts mate with each other is very important.

STEP 1: Lay out the workpieces face down and label the inside faces with an “I" (Fig. 17). Label the other side "O" for "outside surface."

STEP 2: Label the corners “A", “B", “C", and “D" (Fig. 18).

STEP 3: Label the tail boards (drawer sides) with a “T" (Fig. 19).

STEP 4: Label the pin boards (drawer front and back) with a “P" (Fig. 20)

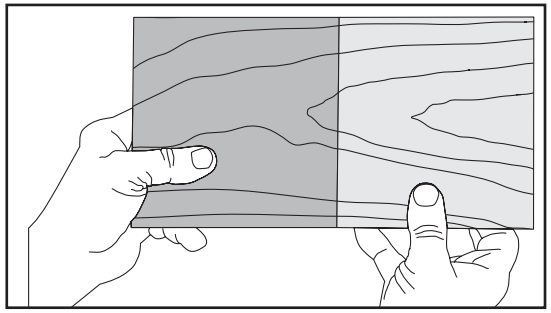

Fig. 13

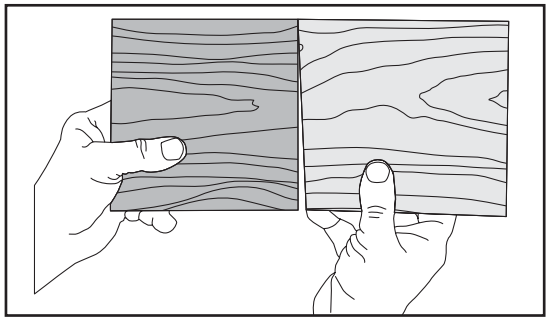

Fig. 14

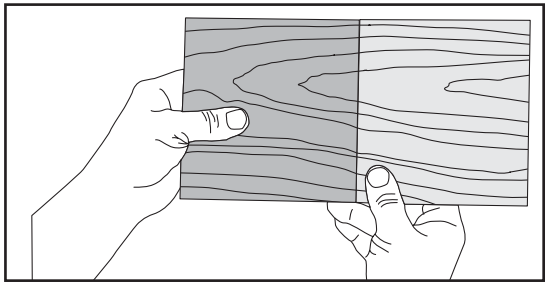

Fig. 15

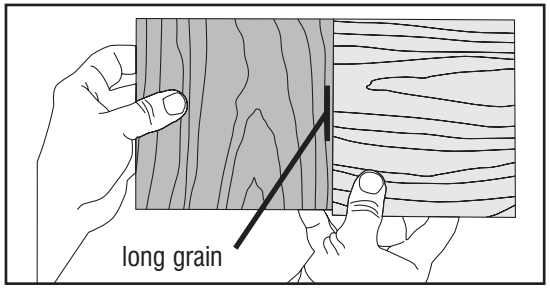

Fig. 16

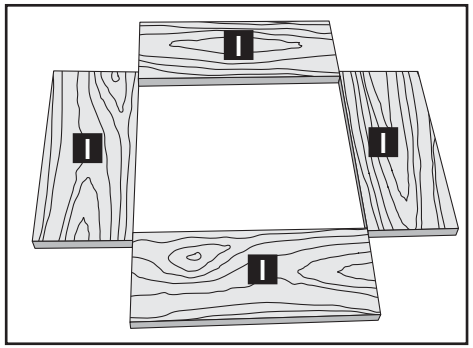

Fig. 17

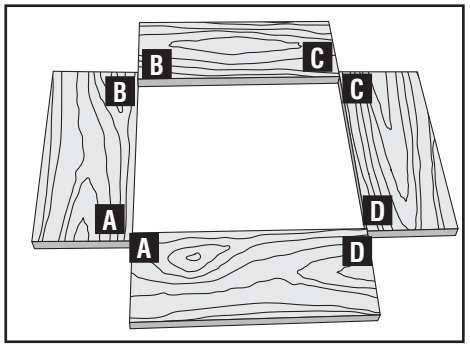

Fig. 18

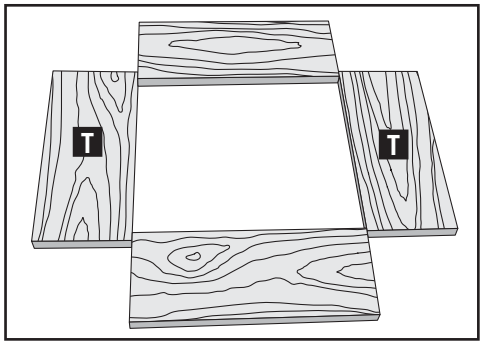

Fig. 19

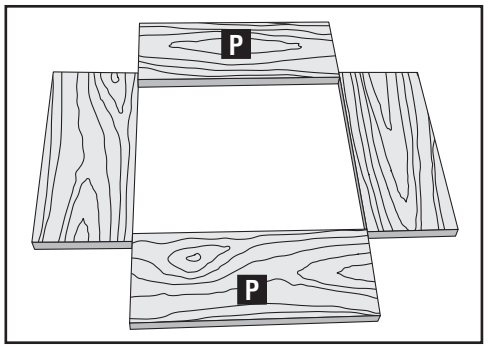

Fig. 20

BOARD LENGTHS

To determine what length your workpieces should be in a typical dovetail drawer project, first visualize your final project and determine the following:

* What kind of joints will you use on the front of the drawer and on the back of the drawer?
* What are the outside dimensions of the resulting drawer?
* What is the tail height (the distance "Y" in Fig. 21) on the dovetail joints you will make?
* How thick is your pinboard (the distance "X" in Fig. 21)?

NOTE: For our example, we will assume the drawer is 12 inches long and 10 inches wide; tail height for all dovetails is 3/8"; and the pinboards are 3/4" thick

NOTE: The pinboards do not have to be the same thickness. Also, the tail height from corner to corner can vary if desired.

Now, follow this guide:

PINBOARD

The pinboard should be 10 inches long.

NOTE: The pinboard length is always determined by the final project outside dimensions - whether the joints used are through dovetail or half-blind dovetail.

TAILBOARD

THROUGH DOVETAIL ON BACK AND FRONT (Fig. 22)

If doing through dovetails on the back and front, both boards are always cut to match the outside dimensions of the project. In this case, the tailboard will be 12 inches.

HALF-BLIND ON FRONT/ THROUGH DOVETAIL ON BACK (Fig. 23)

For a half-blind dovetail, the length of the tailboard is determined by subtracting the pinboard thickness (3/4") from the outside dimension of the tailboard side (12") and then adding back the tail height distance (3/8"). This means the tailboard would be cut to 11 5/8" length.

HALF-BLIND ON FRONT AND BACK (Fig. 24)

The board length for tailboards in this example is determined by subtracting the thickness of both pinboards (1-1/2") from the outside dimension of the tailboard side (12"). This equals 10-1/2". Then, you add back the sum of the desired tail heights (3/4"). This equals 11-1/4".

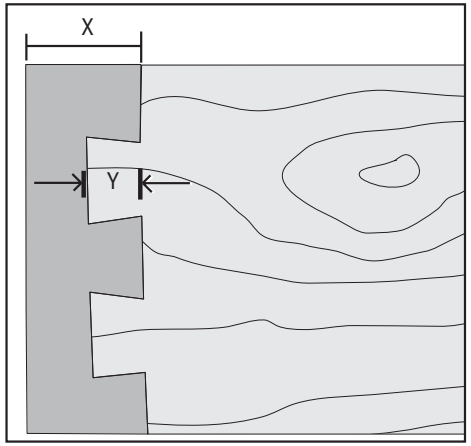

Fig. 21

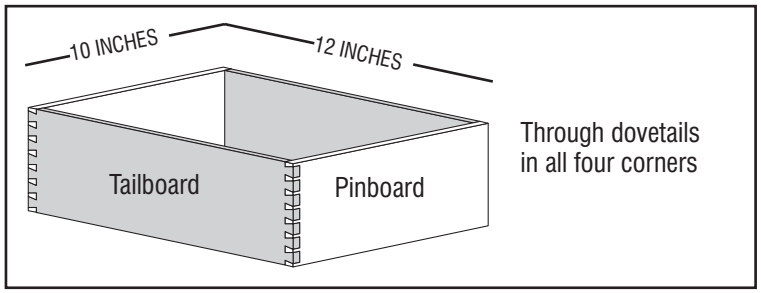

Fig. 22

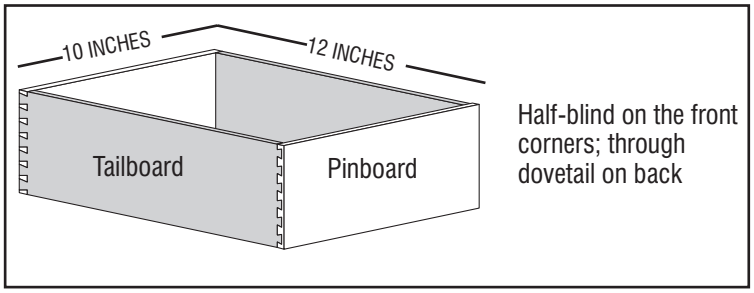

Fig. 23

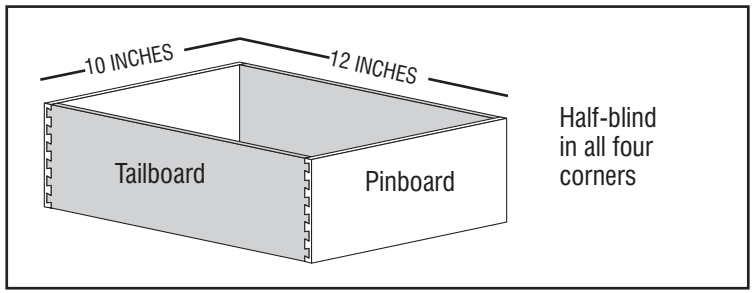

Fig. 24

TIPS FOR MAKING DRAWERS AND BOXES

Tails (A) Fig. 25 are cut into the sides of the drawers, while pins (B) are cut into the fronts and backs of drawers.

You can use either solid wood or plywood for the drawer bottoms. Insert the bottoms in a groove along the bottom of the inside fronts and sides. Allow the drawer bottom to be free-floating (without glue) to allow for seasonal expansion and contraction.

The grooves can go all the way to the ends of the boards if the joints are half-blind dovetails. To accomplish this, position the groove so that it runs through one of the tails on the side (Fig. 26).

You will have to stop the grooves on through dovetails or box joints before they reach the end of the board to prevent them from being seen, as shown in Fig. 27.

Fig. 28 shows what the groove looks like in the board when it is hidden or visible in the through dovetail or box joints.

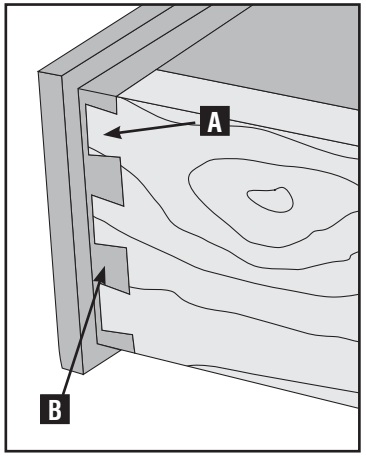

Fig. 25

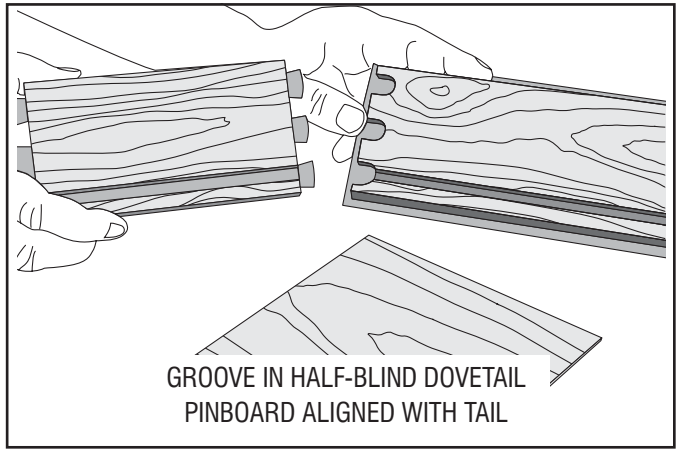

Fig. 26

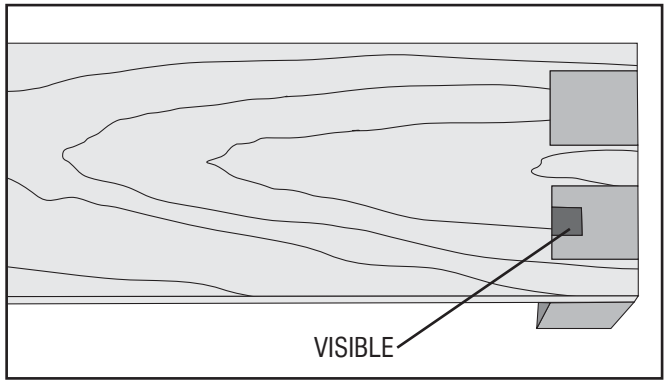

Fig. 27

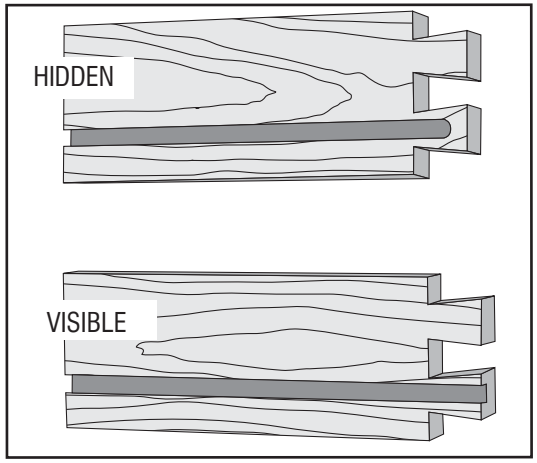

Fig. 28

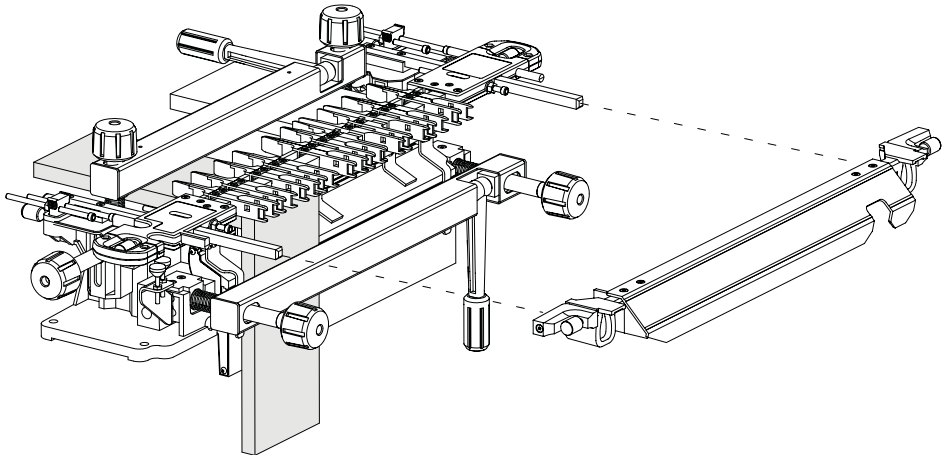

Basic Operations

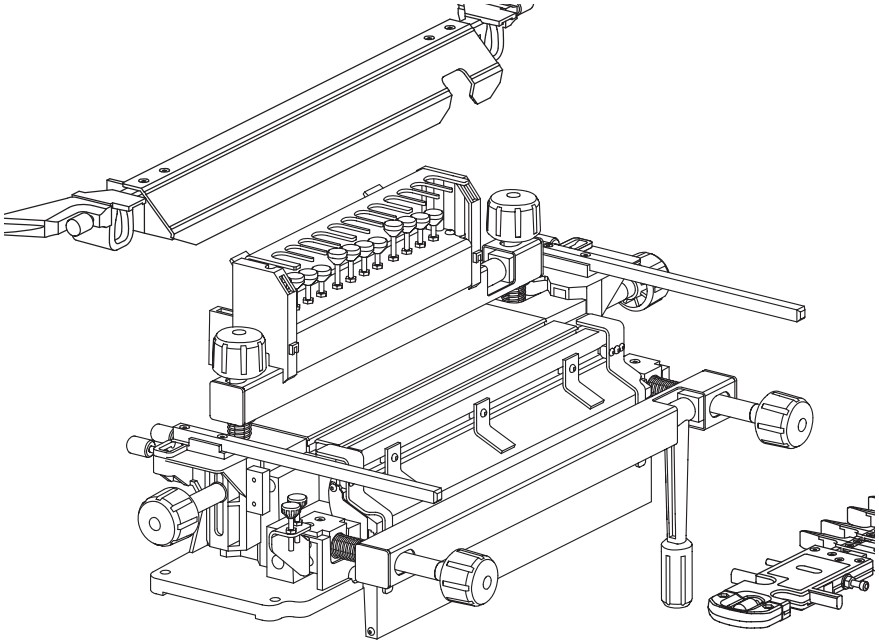

SETTING UP THE OMNIJIG®

In addition to the manual, there are a number of instructional labels located on the OMNIJIG®, plus setup guide cards (standard with some models) that are provided to help guide you through the various applications that can be achieved. As you read through the manual be sure to refer to the labels located on the templates and stabilizer bar (examples are shown to the right) and setup guides as applicable.

NOTE: Examples of labels and setup guides are shown for illustration purposes only and should not be used for guidance.

⚠WARNING: Read the instruction manual for your router before attempting any cuts on the OMNIJIG®.

⚠WARNING: ALWAYS USE SAFETY GLASSES. (ANSI Z87.1) and (CAN/CSA Z94.3) Everyday eyeglasses are NOT safety glasses. Also use face or dust mask if cutting operation is dusty. ALWAYS WEAR CERTIFIED SAFETY EQUIPMENT:

- ANSI Z87.1 eye protection (CAN/CSA Z94.3)
- ANSI S12.6 (S3.19) hearing protection
- NIOSH/OSHA/MSHA respiratory protection

Dovetail Setup Guide

PORTER CABLE

A Through

Standard Size		A•Tails		A•Pins	
max wood thickness	stops	dovetail bit	template guide	straight bit	template guide
1/2" *	A1	D1	G1	S2	G6
5/8" *	A2	D2			
3/4" *	A3	D3			
3/4"	A4	D4			G2
1"	A5	D5			
1-1/2"	A6	D6			G0
Miniature					
3/8" *	A7	D0	G7	S1	G8
1/2" *	A8	D1			
5/8" *	A9	D2			

B Variable-Spaced Half-Blind

Standard Size			
tail height (approximate)	stops	dovetail bit	template guide
1/4"	B1	D4	G2
3/8"			G3
1/2"			G4
5/8"			G5
Miniature			
1/4" *	B2	D0	G8
3/8" *		D1	G7
1/2" *			G8
5/8" *		D2	G7

*capable of making dovetails with narrow pins

C Single-Pass Half-Blind

tail height (approximate)	stops	dovetail bit	template guide
1/4"	C1	D4	G2
3/8"			G3
1/2"			G4
5/8"			G5

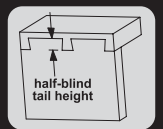

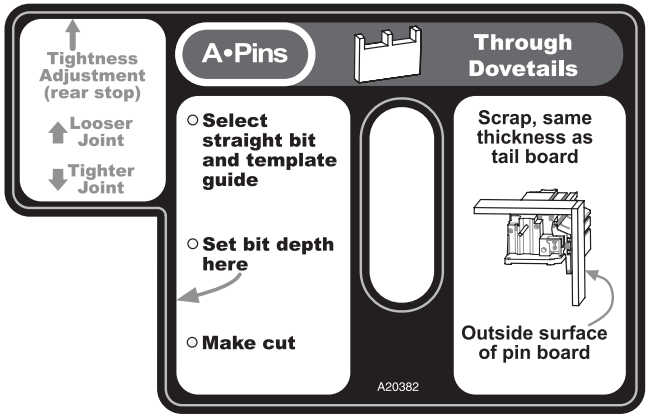

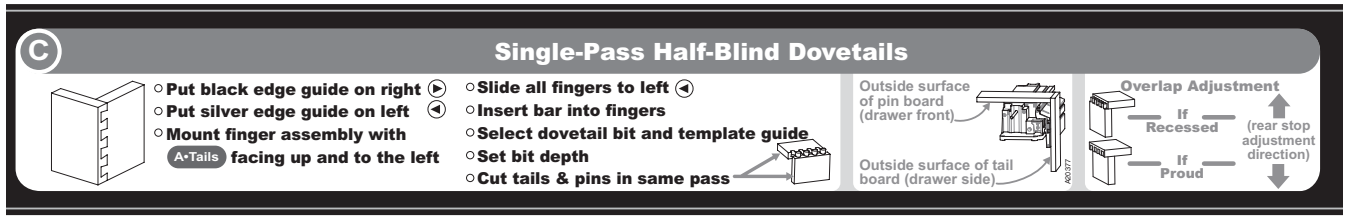

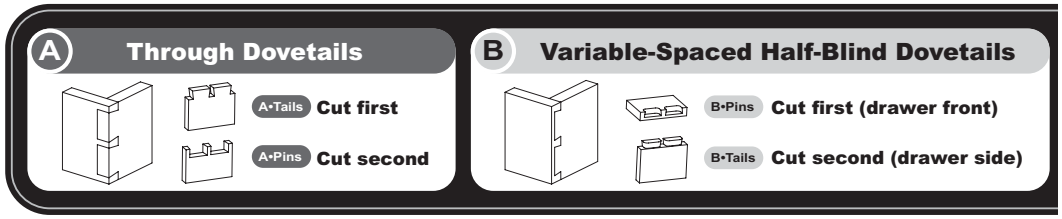

BENCH MOUNTING
The OMNIJIG® base is designed so it can be either clamped to the edge of a sturdy workbench (as shown in Fig. C1) or bolted to the table through the holes (A) Fig. C1 provided in the base. The OMNIJIG® should be secured using one of these mounting methods at all times.

NOTE: When carrying the jig, grab the workpiece mounting bars (WW) Fig. C1 for best support.

ROUTER BIT DEPTH POD
Install router bit depth pod (B) Fig. C2, on the back workpiece clamping bar at holes (C) Fig. C2 using the included screws.

INSTRUCTIONAL DVD
Before using the OMNIJIG® for the first time, you may want to watch the included DVD to get familiar with the operations and set-up for the OMNIJIG®.

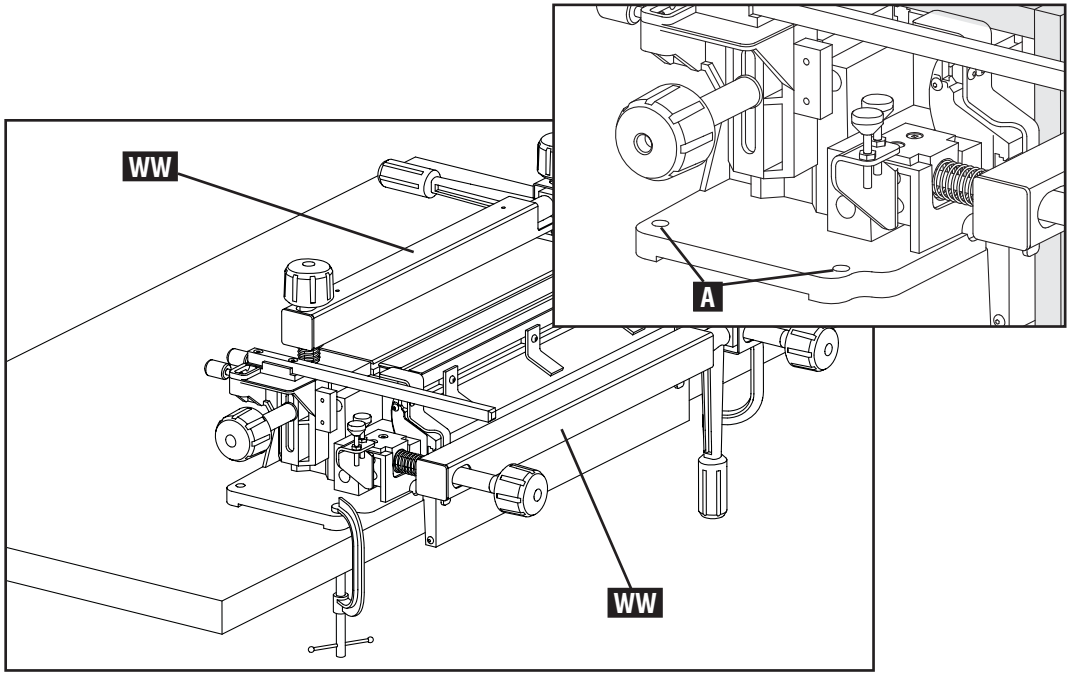

Fig. C1

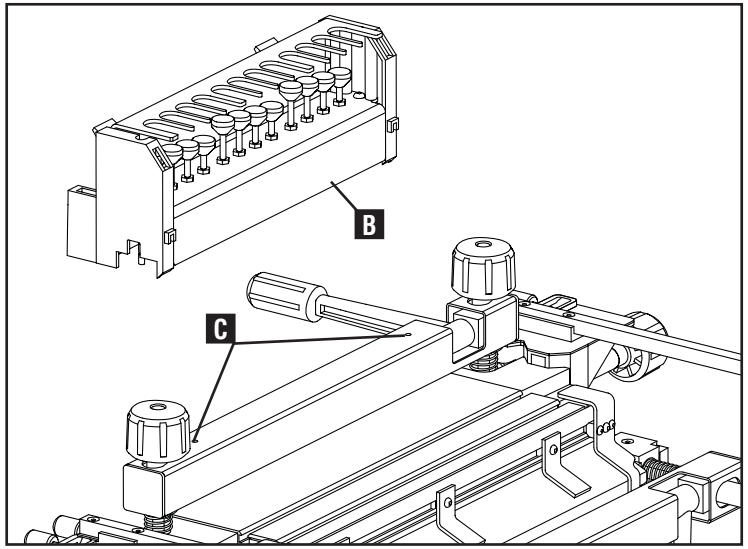

Fig. C2

TYPICAL OMNIJIG ADJUSTMENTS

PLACING AND SIZING STOPS

Setup for all joints includes the selection of either single or double stops (D and E) Fig. C5 included with your unit. Two stops are necessary - one for the left and one for the right of the OMNIJIG® - and enable the template to be pushed up against them and locked in place to set the template's position on the jig. The various stops are set to different lengths to accommodate the wide variety of applications that can be performed with the jig. For each application, the template must rest at a specific location on the jig before the cuts are made.

While all stops that come as standard with either the OMNIJIG® or template accessories are pre-set dimensionally, they can be adjusted to meet your own specific requirements. By adjusting the stop screws (G) Fig C5 forward or backward, the position of the template on the jig can be altered. When sizing the stops to your own specifications, you need to make sure that both stops (left and right) are set to the same dimensions. To do this, set one to your dimensions and then place both left and right stop together as shown in Fig. C6 and make sure the tips of the unset screw post hits the post on the properly sized stop, as shown.

IMPORTANT: Each pair of stops must be oriented left and right on the jig, so that the labels on the stops are readable as you look at the jig from the front. The 'left' stop is therefore placed to your left for example. The knurled knobs (F) Fig C5, must be added and tightened to the back of the jig once the template stops are in place. Their purpose is to firmly hold the template stops in the jig to ensure that the template is positioned correctly. The stops are able to move if the knobs are not appropriately tightened, which in turn can allow the template to be misaligned. An ill-fitting joint can result.

NOTE: You can adjust stops for various applications. See APPENDIX: SIZING YOUR OWN STOPS" for more.

REMOVING AND REPLACING TEMPLATES

Templates for the jig are mounted and secured onto two mounting bars (H) Fig. C7. The bars (H) must be raised to remove or replace a template. Also, the template's knurled thumb screws (L) need to be loose.

To remove a template:

1. Remove the stabilizer bar (J) by loosening knurled thumb screws at each end of bar. The stabilizer bar (J) Fig. C7 can be mounted temporarily on the back of the router bit depth pod (K) as shown in Fig. C7.
2. Loosen the knurled thumb screws (L) Fig. C7 on both ends of the template.
3. Loosen template mounting rod lock knobs (M) and raise the mounting bars (H).
4. Slide template off to remove.
5. When placing the template back on the jig, be sure the screws (L) are still loose. Place the template on the bars (H) and lower the template on the workpiece.
6. Replace stabilizer bar (J) back onto bars (H).
7. Hold the template down in the center, then tighten template mounting rod lock knobs (M)
8. Tighten the template's knurled thumb screws (L). Then, tighten stabilizer bar.

NOTE: Be sure the template and stabilizer bar are on the rods (H) Fig. C7 and positioned correctly over the workpiece before they are locked down.

NOTE: Most templates include on-board labels on the upper left side (R) Fig. C7 to guide you through key steps of setting up and making cuts.

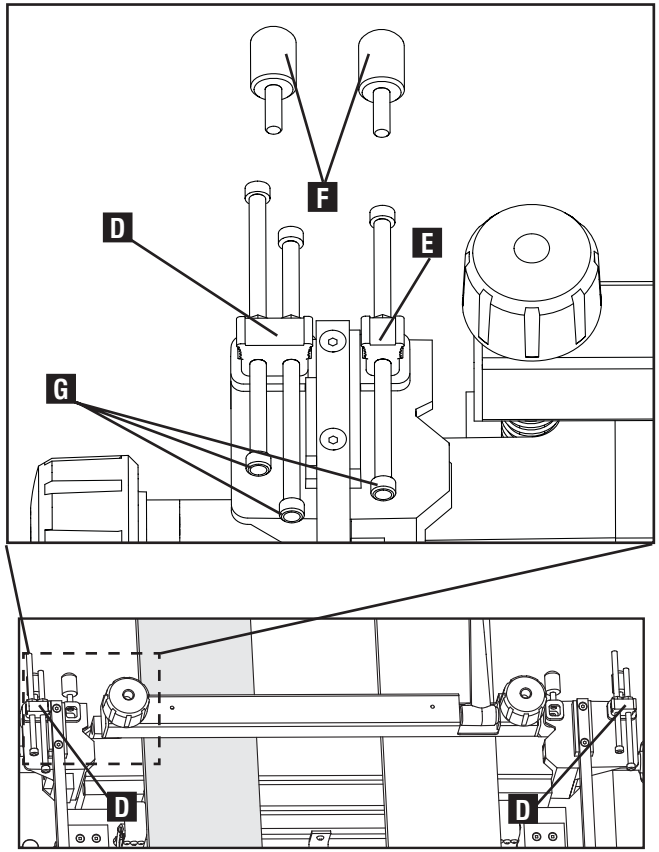

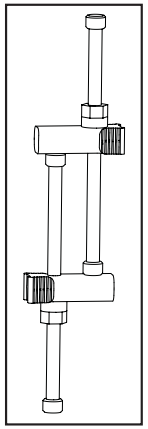

Fig. C6

Fig. C5

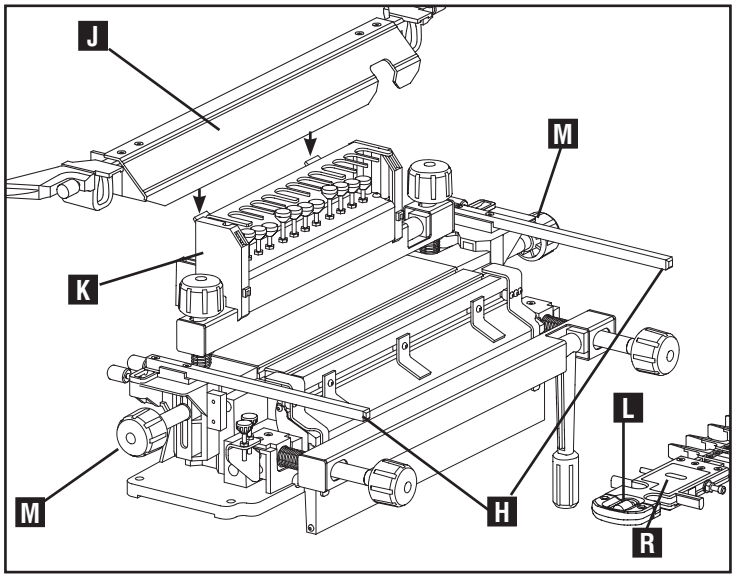

Fig. C7

ACCESSORY TEMPLATES

Templates included with the Omnijig are pre-set, but before placing an accessory template onto the bars for the first time, you will need to make a one-time adjustment:

1. Loosen (do not remove) square-head screws on both sides of the templates. Examples of square head screws shown at (S) Fig. C8.
2. Loosen the knurled thumb screws (L) at both ends of the template.
3. Slide the template onto the bars, lower the bars and push template firmly against the stops and down onto the workpiece. Tighten the template mounting rod lock knobs (M).
4. Tighten the knurled thumb screws and then tighten square-head screws that were loosened above.
5. The template is now properly adjusted for your jig.

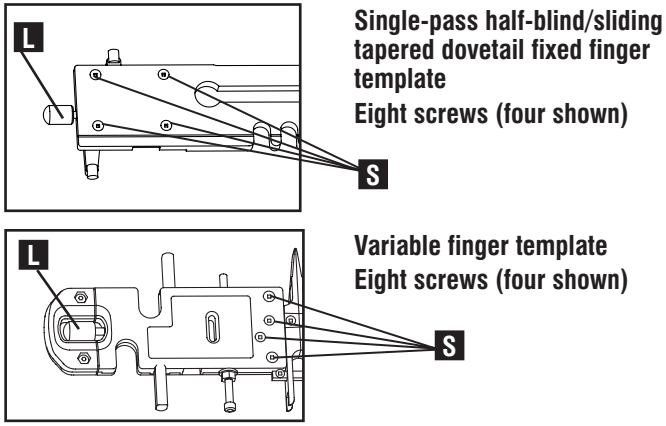

Single-pass half-blind/sliding tapered dovetail fixed finger template
Eight screws (four shown)

Variable finger template
Eight screws (four shown)

Fig. C8

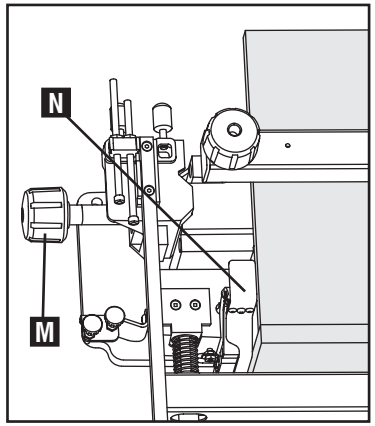

Fig. C9

EDGE GUIDES

Edge guides (one shown at (N) fig. C9) are provided to help align the sides of the wood properly. When a workpiece is mounted in the vertical or horizontal plane of the jig, it needs to be flush against the proper guide.

For some joints, the workpieces need to line up, as seen in Fig. C9. In others, the pieces need to be mounted offset from each other, as seen in Fig. C9A. Follow your joint's specific instructions on wood mounting.

NOTE: When the boards are mounted offset from each other, the distance of offset is 1/2".

Some joints require the edge guides to be moved from one end of the jig to the other. To accomplish this, loosen the two square drive screws on each guide (an example is shown at T, Fig C10), move the edge guides, and then retighten the square drive screws.

NOTE: To ensure the edge guides stay square with the jig, when re-tightening, be sure the top screw is tightened before the bottom.

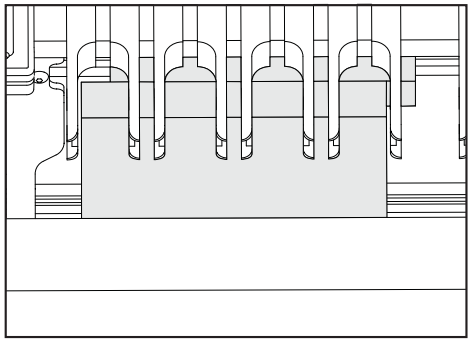

Fig. C9A

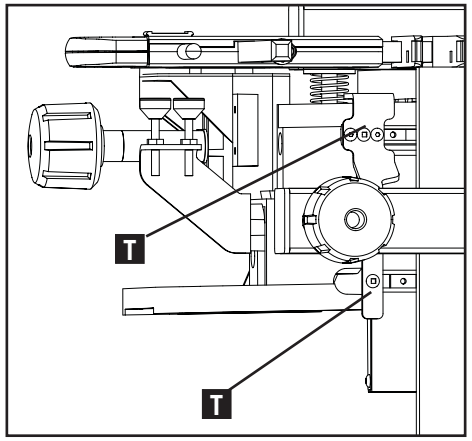

Fig. C10

MOUNTING THE WOOD

Before placing wood into the jig to be cut, make sure it is square on all four sides. (Read the WOOD PREPARATION section for tips on making sure your workpiece is square.)

Because the instructions for most joints are located on labels on the left side of the templates, the wood being cut (U) or (W) Fig. C11 is usually shown lined up on the left side of the jig.

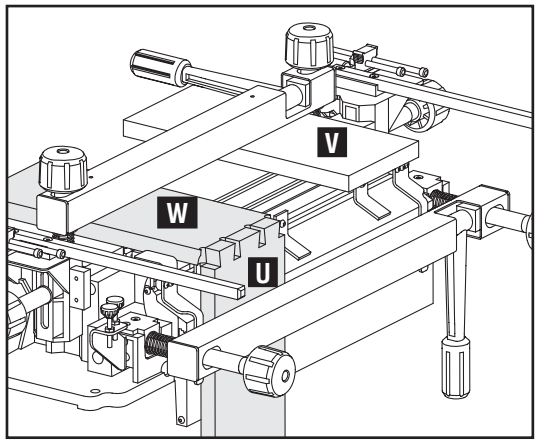

Fig. C11

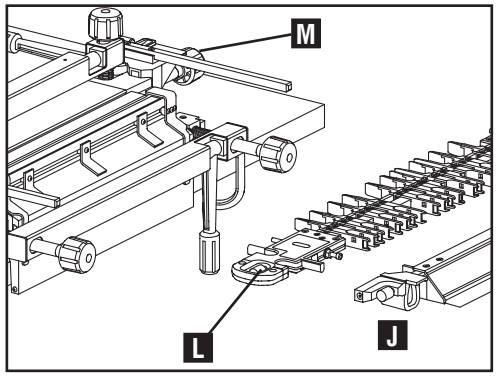

Fig. C12

For horizontally mounted workpieces (W) always include a scrap piece (V) Fig. C13 of the same thickness on the opposite side to ensure flatness of the template and to provide stability.

NOTE: Before mounting the wood, it may help to remove the stabilizer bar (J) Fig. C12. Also, raise and lock the mounting bars (H) Fig. C13 above the jig while positioning your workpiece. Remember to loosen the template's knurled thumb screws (L) Fig. C12 before loosening the template mounting rod lock knobs (M) Fig. C13 as you raise the template.

Workpieces can be mounted in either the horizontal (W) Fig. C13 or vertical (X) position to be cut, depending on the joint you are making. Both vertically and horizontally mounted wood is clamped the same way:

1. Loosen the workpiece locking bar knobs (Y) Fig. C13 and pull workpiece locking lever (Z) forward for horizontal piece, or up for the vertical piece.
2. Slide in wood so it is snug and square against the proper left-side edge guide.
3. Tighten the workpiece locking bar knobs (Y) until bar almost touches the workpiece.
4. Clamp workpiece locking bar down and secure the wood by pushing the lever (Z) Fig. C13 to the rear of the jig for horizontal workpiece, or pushing down for vertical workpiece.

Before cutting most joints, make sure the template is flat down on the horizontal wood and the vertical piece is pushed up against the bottom of the template.

NOTE: Also, before mounting the workpieces, be sure the jig base is free from wood chips or dust build-up. The boards to be cut must be flat against the jig base and edge guides to ensure joint accuracy and consistency.

VARIABLE FINGERS

The variable-spaced template is shipped with the fingers in position to cut single-pass half blind dovetails (as shown in Fig. C14.

To take advantage of the variable spacing functionality, first loosen set screw located at (AA) Fig. C14 with supplied square screwdriver (BB) and slide the bar out. (Be sure to re-attach screw for use later).

Then, slightly loosen the finger's screws - one is shown at (CC) - and slide fingers where desired.

NOTE: If a finger will not move, push down slightly on the screw after it is loose to release the finger.

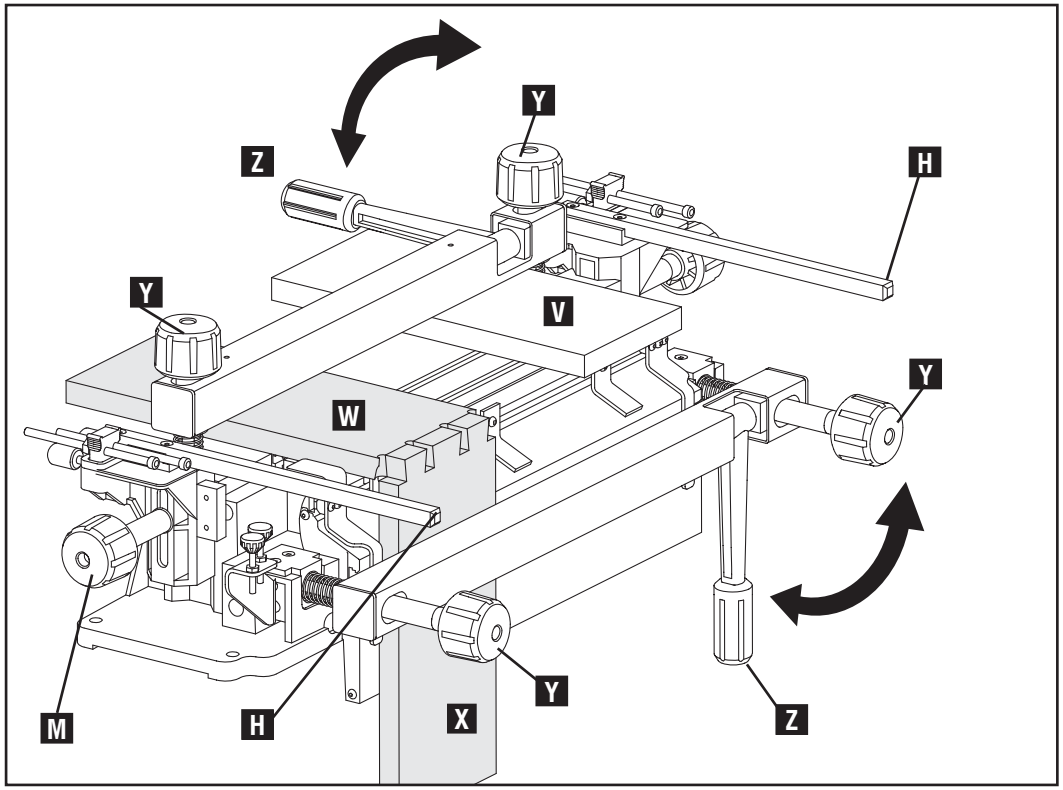

Fig. C13

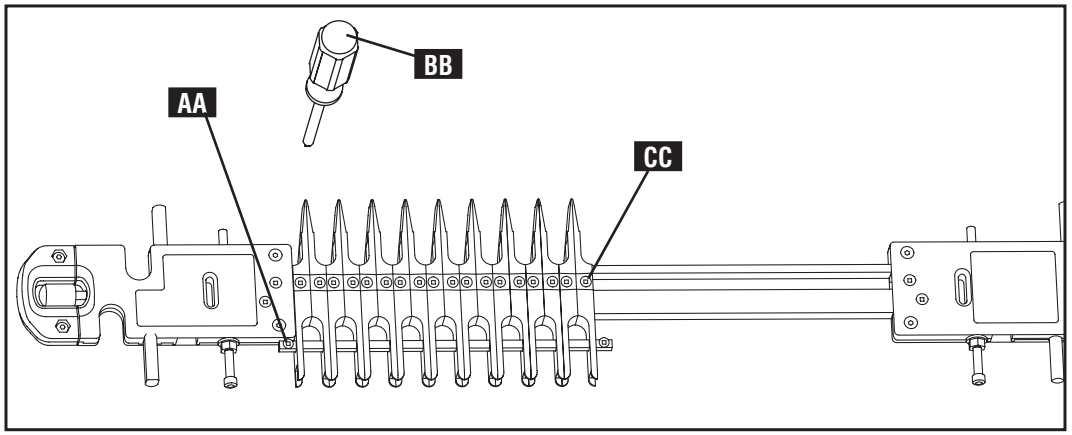

Fig. C14

While the finger pairs (DD) Fig. C15 can be placed anywhere for your variable-spaced joints, they usually move together, as shown at (DD).

When they are separated (EE) – do not cut between the flat edge area (FF). Only cut in the angled area (GG).

SELECTING BITS AND TEMPLATE GUIDES

Your choice of template guide (JJ) Fig. C17 and router bit (KK) is determined by several factors, such as the kind of joint you are making, the characteristics of that joint or the thickness of your workpiece. To decide which bit and guide to use, consult the Dovetail Setup Guide, the template labels or the manual.

NOTE: See your router manual for instructions on how to install bits and template guides and also on setting the depth of your router bit. Be sure the template guide is secured firmly. Before making cuts, it is important that the bit is centered in the sub-base. If the bit is not centered, then an ill-fitting joint can result.

SETTING ROUTER BIT DEPTH AND MAKING THE CUT

Before you make any cuts, make sure your router bit depth is set properly according to your specific joint's instructions. Router bit depth gauges are located on the OMNIJIG®. This manual and labels on the tool will guide you to the proper bit depth gauge.

Fig. C18 shows the router bit depth pod. Fig. C19 shows the depth gauge that is attached to the left side of the jig base.

When setting the router bit depth, first raise the router bit, set router on the rest area above the gauge and then slowly lower the bit onto the gauge. The depth is set when bit (LL) barely touches the gauge.

O-RING INSTALLATION

When installing template guide (MM) Fig. C20, be sure to place O-ring (NN) over the template guide before attaching the lock nut (OO). The O-ring helps secure the template guide's lock nut during operation. If the lock nut becomes loose, a poor-fitting joint can result.

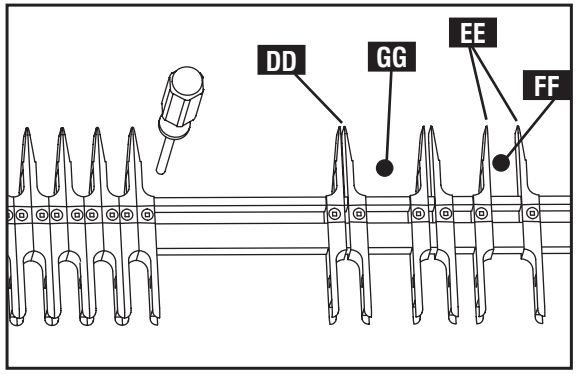

Fig. C15

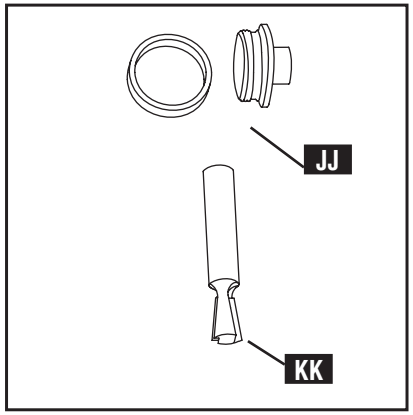

Fig. C17

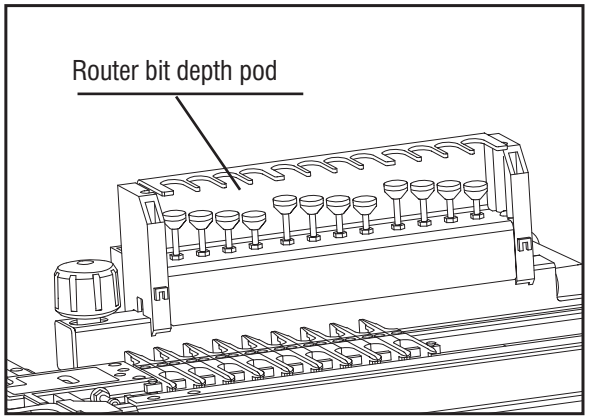

Fig. C18

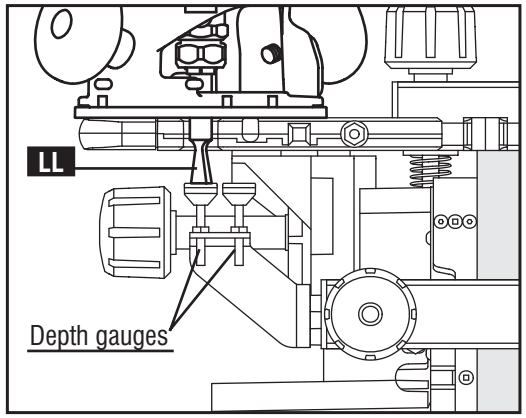

Fig. C19

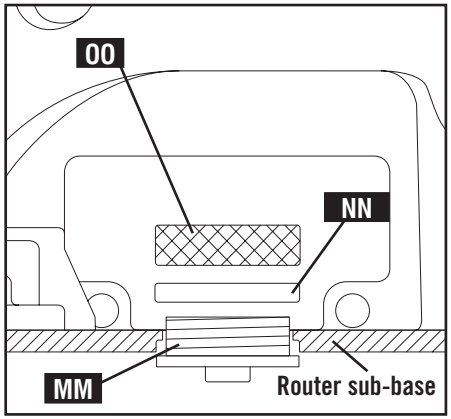

Fig. C20

DOVETAIL SETUP GUIDE

The Dovetail Setup Guide is included with the 24" OMNIJIG® and any variable finger accessory (miniature or standard size). The card describes what stops, bits and template guides are needed to make standard and miniature through dovetails, variable-spaced half-blind dovetails and single-pass half-blind dovetails.

NOTE: This card only applies to the variable finger templates. For all other templates, consult the manual or the labels on the template.

NOTE: Stops and bits are available as accessories and will be needed to make some joints called out on the Dovetail Setup Guide.

THROUGH DOVETAILS

To use the Dovetail Setup Guide to help you cut through dovetails, first decide what your wood thickness is. For example, if you are cutting 3/4" wood, you would start with the wood thickness and look to the right for the items needed:

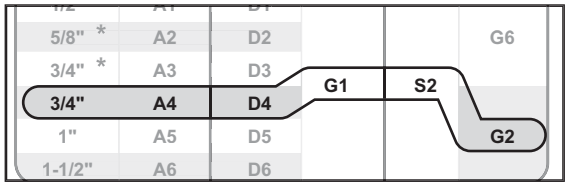

STANDARD SIZE: The standard size variable finger template is supplied with the A4 stops, a D4 dovetail bit, an S2 straight bit and the necessary template guides needed to cut through dovetail joints in any thickness of wood up to 3/4". For thicker wood, accessory bits listed on the card are available and the catalog number is on the back.

> **NOTE:** The bit names (S1, D1, etc.) were developed for use with the OMNIJIG®. The bit specs for each are on the back of the Dovetail Setup Guide.

MINIATURE SIZE: The miniature variable finger template is supplied with the A8 stops, a D1 dovetail bit, an S1 straight bit and the template guides needed for cutting miniature through dovetails in any thickness of stock up to 1/2" thick. To cut miniature through dovetails on 5/8" wood, you will need the A9 stops and a D2 bit.

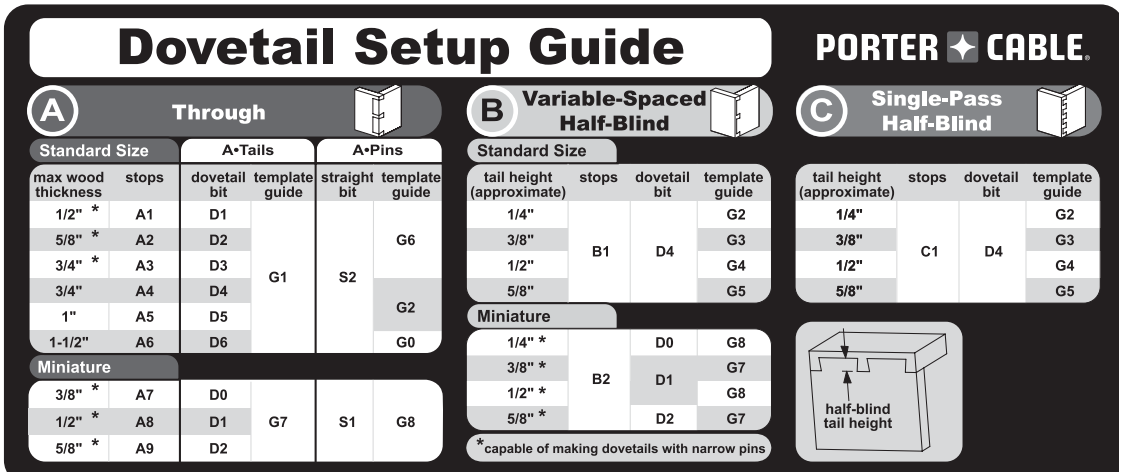

VARIABLE-SPACED HALF-BLIND DOVETAILS

The chart for variable-spaced half-blind dovetails is used in the same manner, except you must first choose one of the tail heights listed in the chart to determine what items are needed.

STANDARD SIZE: The B1 stops and D4 dovetail bit are used for all four available tail heights. The only difference is which template guide to use - all of which are supplied with the variable finger template.

MINIATURE: Starting with your desired tail height, work across to the right to determine the dovetail bit and template guide needed.

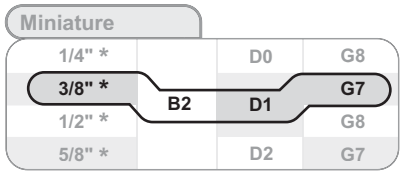

NARROW PINS

For both standard and miniature size templates, the asterisk (*) denotes stop, bit and template guide combinations that can cut narrower pins, which most consider a sign of high quality and craftsmanship.

SINGLE PASS HALF-BLIND DOVETAILS

The chart for the single-pass half-blind dovetails is used only when cutting the joint on the variable finger template.

As in the variable-spaced chart, first choose the desired tail height, then determine which template guide is needed. The C1 stops and D4 dovetail bit are used for all tail heights.

ROUTER BIT DEPTH POD

The router bit depth pod comes standard with the 16" and 24" OMNIJIG®.

For the 24" OMNIJIG® (Model 77240), the gauges come pre-set to help you set the bit depth for :
- Variable-spaced half-blind dovetails
- Single-pass half-blind dovetails

For the 16" OMNIJIG® (Model 55160), the gauges come pre-set to help you set the bit depth for :
- Single-pass half-blind dovetails
- Sliding tapered dovetails

While these gauges are pre-set, they can be adjusted to meet your own specific requirements.

An accessory pod is available for adding to your capacity of pre-set joints as you build your OMNIJIG® system.

USER DEFINED GAUGES ON 24" and 16”

The four gauges on the right side are not pre-set and can be adjusted for your specific applications. To adjust them, loosen the hex nut (PP) Fig. C21 and raise or lower the gauge screw post (QQ) as desired.

HOW TO SELECT THE PROPER GAUGE

First, you must determine your approximate bit depth and use the Dovetail Setup Guide, labels and manual to figure out which dovetail bit and template guide you are supposed to use.
Within the group of gauges in your joint style, select the gauge above the label that corresponds to your chosen combination of router bit, bit depth and template guide. Use this gauge to set your router bit depth.
Consult the appropriate chapter for your desired joint for complete instructions on cutting each.

The four single-pass half-blind bit depth gauges on the 24" pod are set up for the variable finger template included with the standard unit (77240). The four comparable gauges on the 16" pod are set for the half-blind / sliding tapered template included with the standard unit (55160). The stops are not interchangeable between the two template styles. If you are using the accessory 24" half-blind / sliding tapered template (77248), the "user defined" bit depth gauges or the "single-pass/half-blind" bit depth gauges will need to be manually set according to instructions included in the appendix. The depth settings are different because the two template styles are not the same thickness.

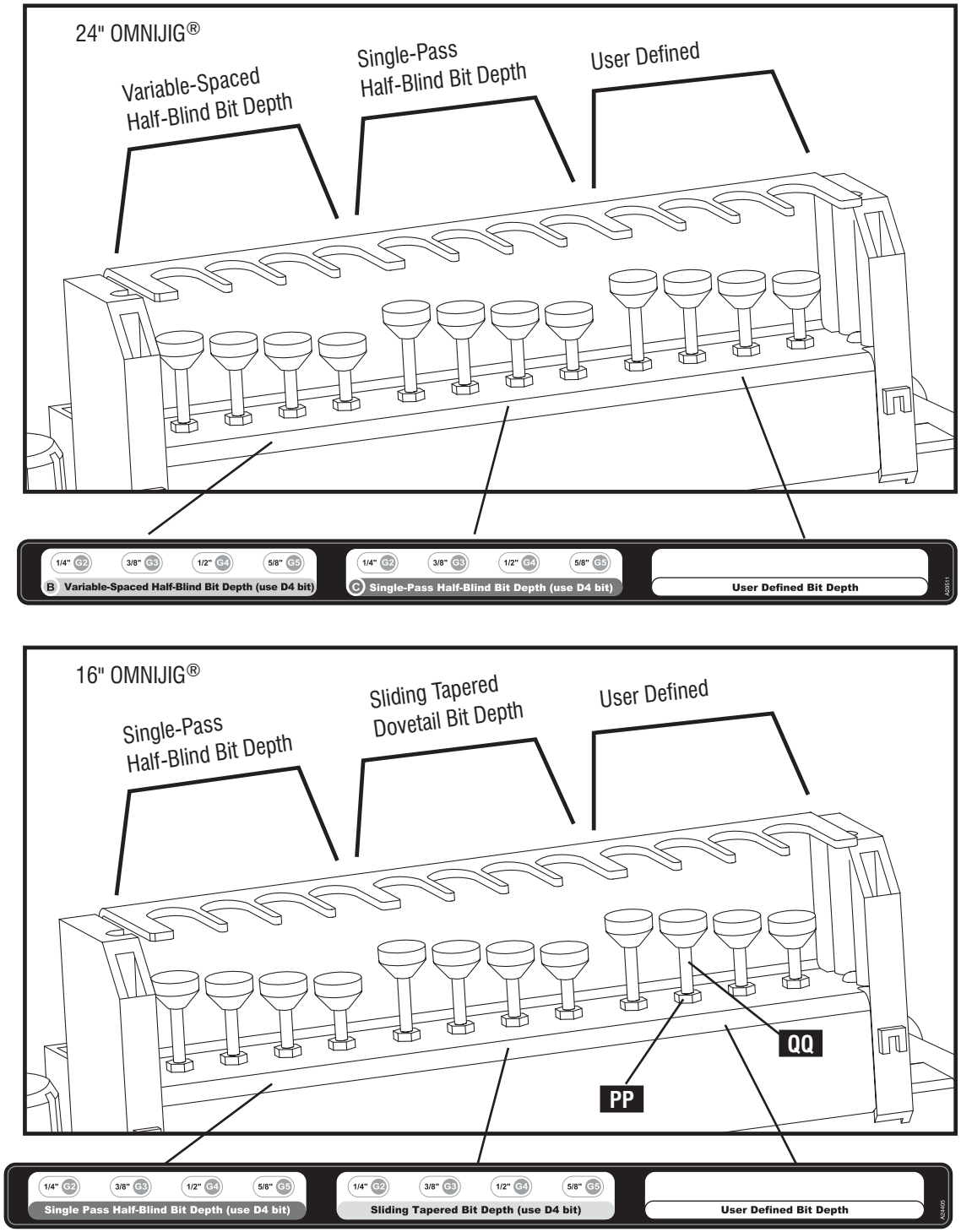

Fig. C21

MAKING CUTS

SAFE CUTTING

⚠WARNING: When making cuts:

- Be sure all fasteners on the jig or the stabilizer bar (knobs, screws, etc.) have been tightened following any adjustments.
- Be sure the template stops are in place.
- Use both hands on the router while making the cut
- Be sure the wood being cut is secured by the appropriate workpiece clamping bars.
- After making a cut and turning the router off, do not move the router or your hands until the router bit stops spinning.
- Disconnect router from power after making a cut, while making any adjustments or while moving wood on and off the jig.
- If sawdust piles up at your feet, be sure to clean it away from the work area to avoid slipping on it.
- Do not raise router off the jig while it is still running. The spinning bit could damage the fingers and cause sparks.
- Be careful when handling variable finger templates because of the sharp fingers.

TIP FOR REDUCING TEAR-OUT DURING CUTS

Tearout is unwanted splintering of the wood fibers that occurs when a router bit enters, exits, or skims the edge of wood and is common to all dovetail jigs. Tearout cannot be eliminated, but it can be reduced by the insertion of additional scrap wood mounted against the workpiece.

ACCESSORIES

DUST COLLECTION

A dust collection shroud (RR) Fig. C22 is available as an accessory for the OMNIJIG. The 16" unit requires Cat. No. 55164, while the 24" model uses Cat. No.77244. Both shrouds have a 4" port that allows for direct attachment to a standard dust collection system.

After assembly, the shroud (RR) Fig. C22 can slide right into the two holes (SS) Fig. C23 at the bottom front of the OMNIJIG® base. Before sliding the shroud in, be sure the front workpiece clamping handle (TT) Fig. C24 is up as shown. Install the chip catcher (UU) to the two holes (VV) in the side of the OMNIJIG® base using two supplied square drive screws.

The lip of dust shroud (RR) should rest in front of the stabilizer bar (XX) as shown in Fig. C25. Be sure the dust shroud (RR) Fig. C26 is also placed above the knob (YY).

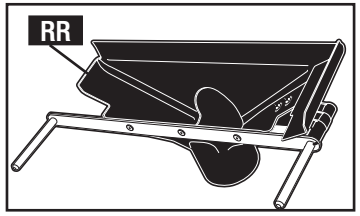

Fig. C22

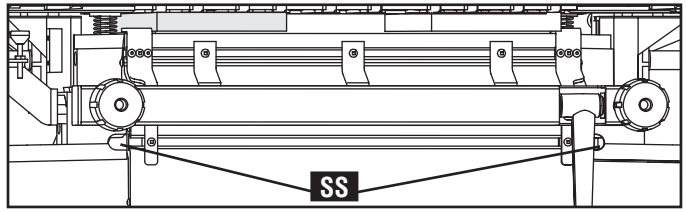

Fig. C23

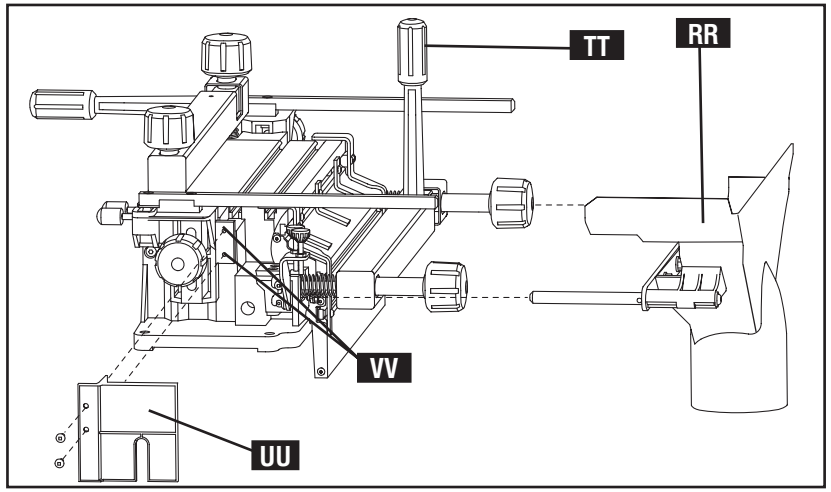

Fig. C24

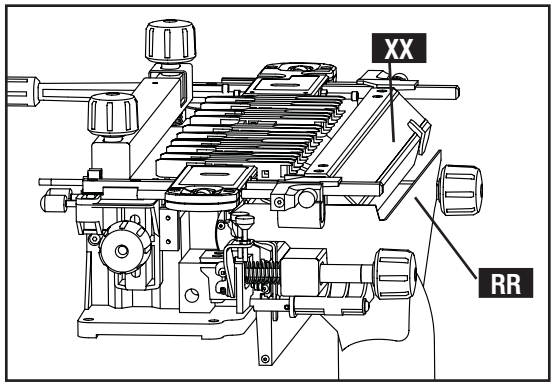

Fig. C25

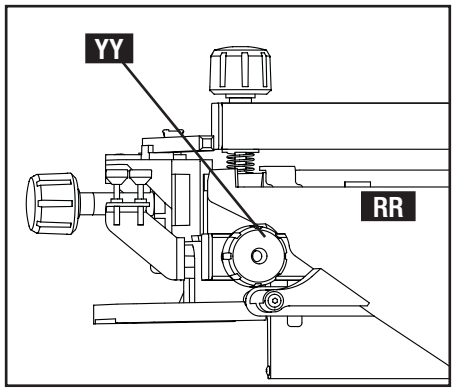

Fig. C26

When adding the stabilizer bar back onto the OMNIJIG when the dust shroud is attached, tilt the bar (XX) as shown in Fig. C27 and be sure it rests as shown in Fig. C25.

STORAGE CASE POSITIONING

An accessory storage box (Cat. No. 77249) is available for storing parts for your OMNIJIG®. This accessory can be placed on the back (Fig. C28) during use or on top of the unit (Fig. C29) for easier storage. The case can also stand alone.

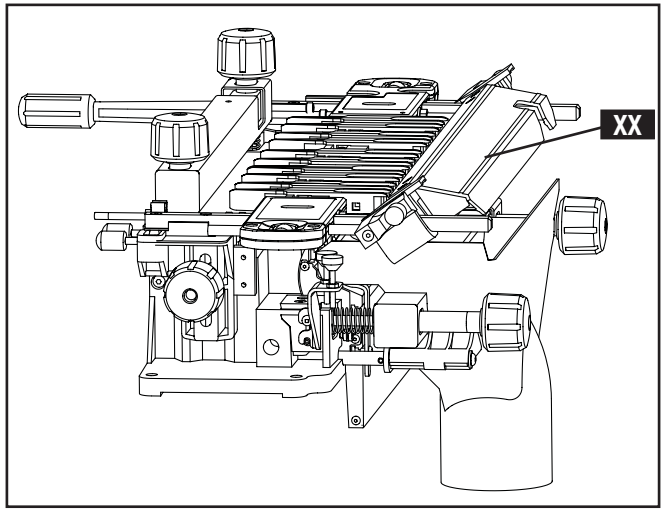

Fig. C27

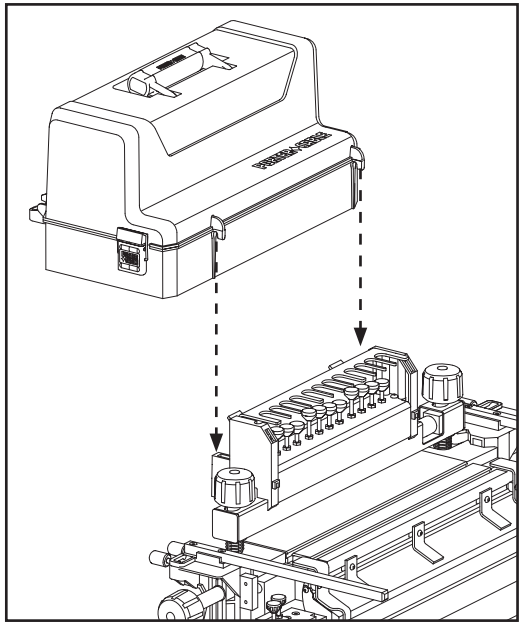

Fig. C28

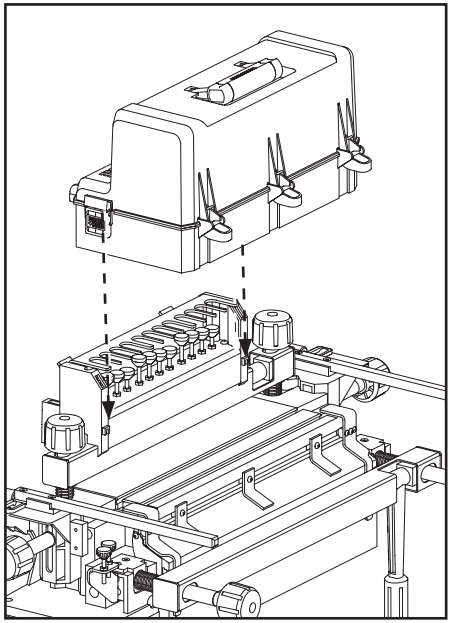

Fig. C29

Through Dovetails

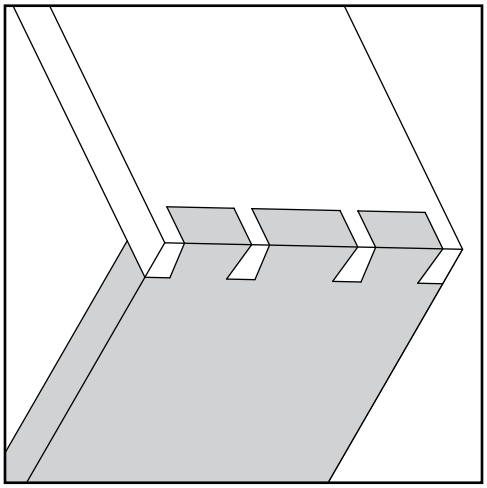

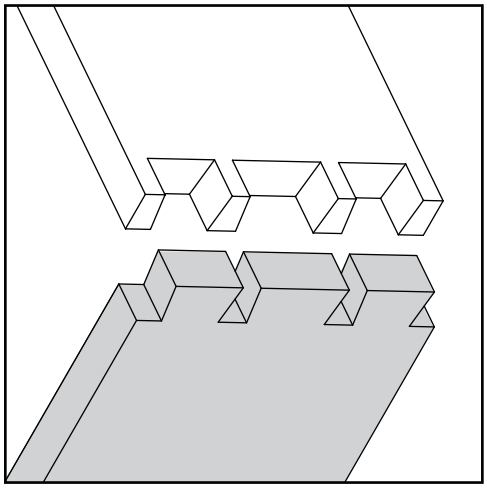

ITEMS NEEDED

With the OMNIJIG®, through dovetail joints are made by first cutting the tailboard (A) Fig. D1 using a dovetail bit. The pinboard (B) is cut next using a straight bit.
You will need:
* variable finger template (miniature or standard)
* straight bit and dovetail bit
* template guide and stops.
Noting your wood thickness, see your **"Dovetail Setup Guide"** for specific router bits, template guides and stops needed. Instructions for using the guide can be found in the "BASIC OPERATIONS" chapter.
The variable finger template comes standard with the 24" OMNIJIG®, and it is available as an accessory for the 16" OMNIJIG®.
Be sure to install the appropriate router bit depth gauge at (C) Fig. D2.

When attaching these depth gauges (C), the top screw should be tightened, followed by the bottom screw (in this order) so that the gauge is firmly in place on the side of the base. While the screws are being tightened it is important to note that the gauge will locate itself correctly on the base so long as NO PRESSURE is applied to it. Applying pressure to the gauge while tightening the screws is likely to cause its intended location to be mis-aligned. This could result in router bit depths being set incorrectly.

SETTING UP AND MAKING THE CUT

NOTE: Use the red on-board labels ("A Pins" and "A Tails") on the variable finger template for a guide as you follow these instructions. The instructions are for both the regular size and miniature variable finger templates, except where noted.
NOTE: For the miniature variable fingers, the fingers shown at (D) Fig. D3 are the proper fingers for doing through dovetails.

SPECIAL INSTRUCTIONS FOR USING D6 ROUTER BIT

When using the D6 dovetail bit, the OMNIJIG® can be used to create through dovetails in wood up to 1-1/2" thick. However, there are a few items that are unique to this:

1. There is a minimum wood thickness of 3/4" when using the D6 dovetail bit.
2. The variable finger pairs must be set up to have a minimum 1/8" gap (X) between them as shown in Fig. D4.
3. When cutting the tails, the bulk of the material must first be cleaned out using the S2 straight bit and the G1 template guide. Set the depth of cut of the S2 straight bit to be slightly shallower than the depth of cut of the D6 dovetail bit.

NOTE: You might find it desirable to make multiple passes of the S2 straight bit with increasing depths of cut in order to reduce the vibration on the S2 straight bit.

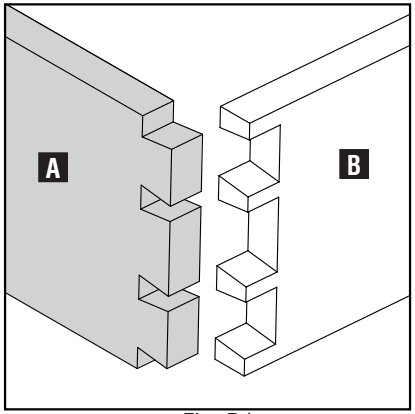

Fig. D1

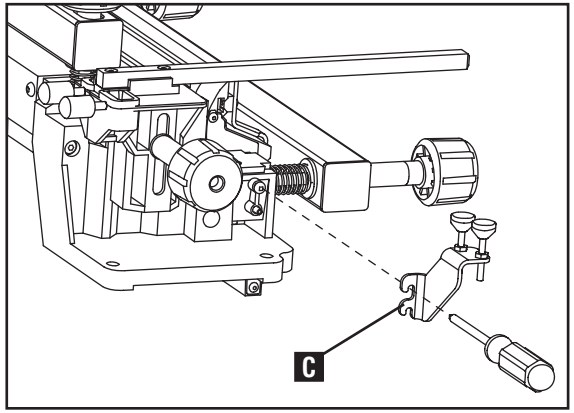

Fig. D2

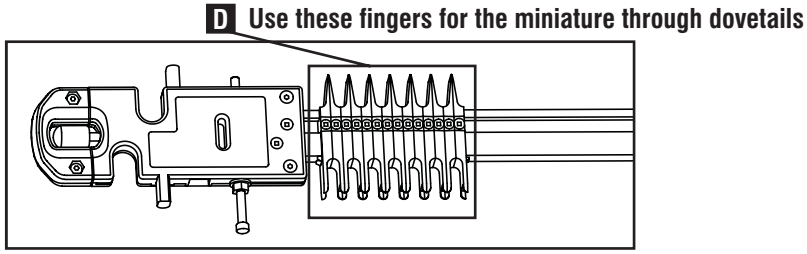

Fig. D3

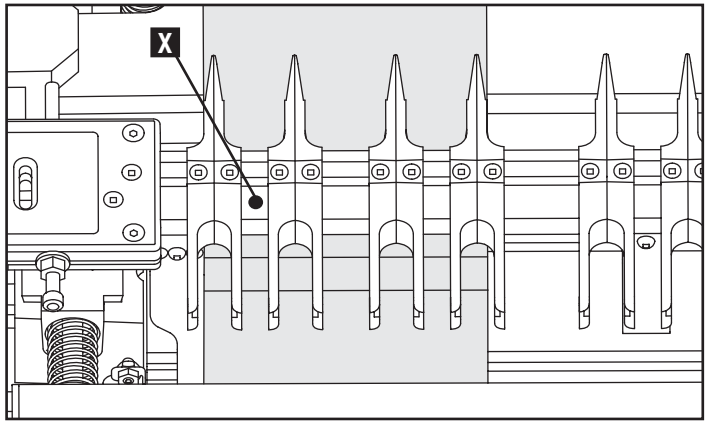

Fig. D4

4. After the bulk of the material has been removed, the D6 bit is used with the G1 template guide to complete the cuts on the tails.
5. The pins are then cut using the S2 straight bit and the G5 template guide, as shown on the dovetail setup guide.

NOTE: You might find it desirable to make multiple passes of the S2 straight bit with increasing depths of cut in order to reduce the vibration on the S2 straight bit.

CUTTING TAILBOARD

1. Insert proper stops (E) Fig. D5 according to the Dovetail Setup Guide.
2. Remove stabilizer bar (F).
3. Make sure variable-spaced finger template is mounted onto the rods with the red “A Tails" label (G) facing up to the left side.
4. Mount a scrap board in the horizontal position, as shown at (H). Be sure this board is the same thickness as the pinboard.

NOTE: Place a board of similar thickness horizontally at the right side of the jig for support.

5. Mount the tailboard in the vertical position (I) with the “outside surface" facing the jig and flush with the bottom of the template.

NOTE: “Outside surface" refers to the outer side of the box or drawer the board will be used on.

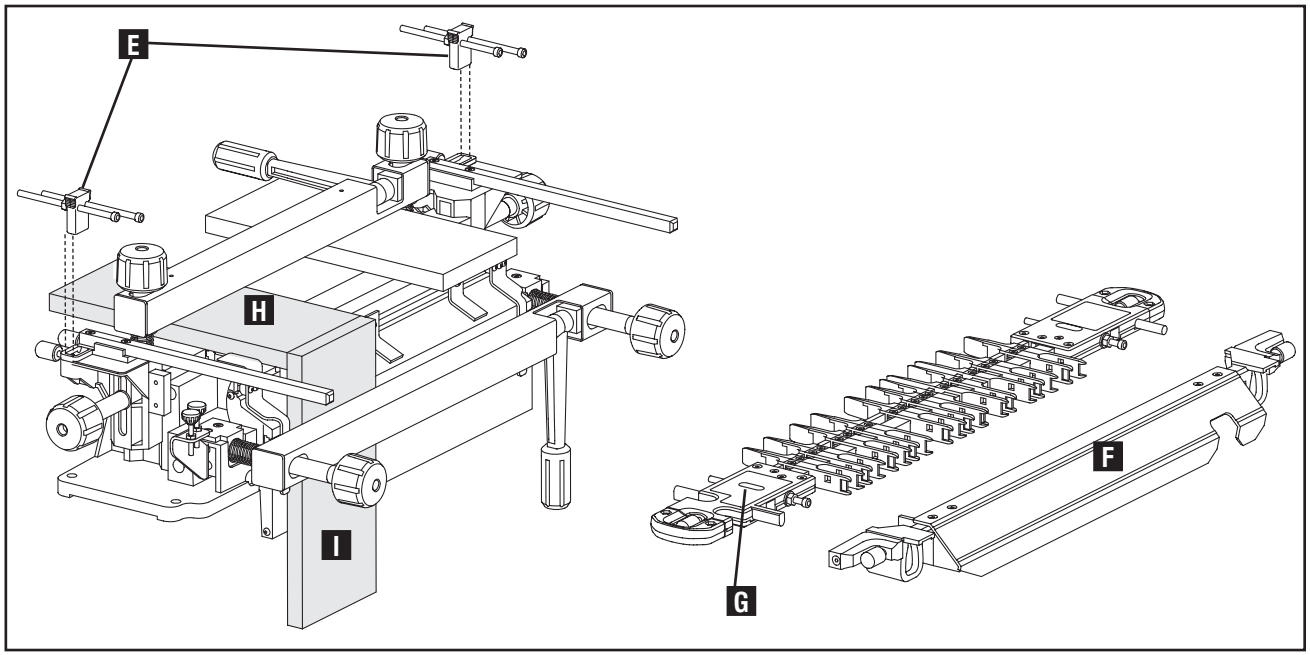

Fig. D5

6. Pull horizontal scrap (H) Fig. D6 forward against the back of the vertical tailboard (I), as shown in Fig. D6.
7. Be sure both boards are lined up flush against the left offset guide (J).
8. Position the fingers using the supplied square screwdriver. An 1/8" gap is recommended between the vertical board and the fingers as shown at (K) and (L) in Fig. D7. This will help maintain proper spacing at the corners.

NOTE: Before making cut, put at least one finger set (M) Fig. D7 1-2 inches away from the right edge of the vertical board for router stability.

9. Make sure template (N) Fig. D8 is flat on the horizontal boards and tighten template lock knobs, one of which is shown at (O).
10. Replace stabilizer bar (F) Fig. D8.
11. Select and install proper dovetail bit and template guide in your router according to the Dovetail Setup Guide.
12. Set router bit depth at the gauge (P) Fig. D8 located at the left side of the template.

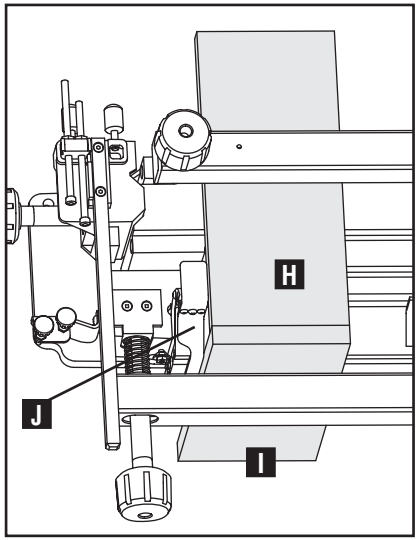

Fig. D6

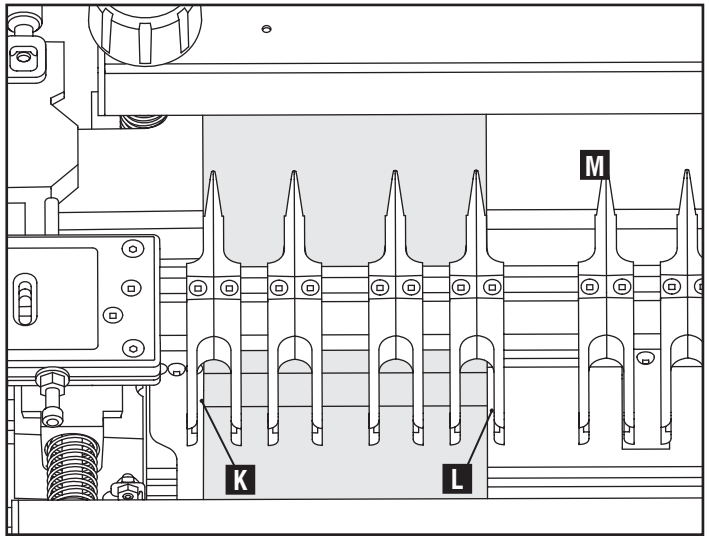

Fig. D7

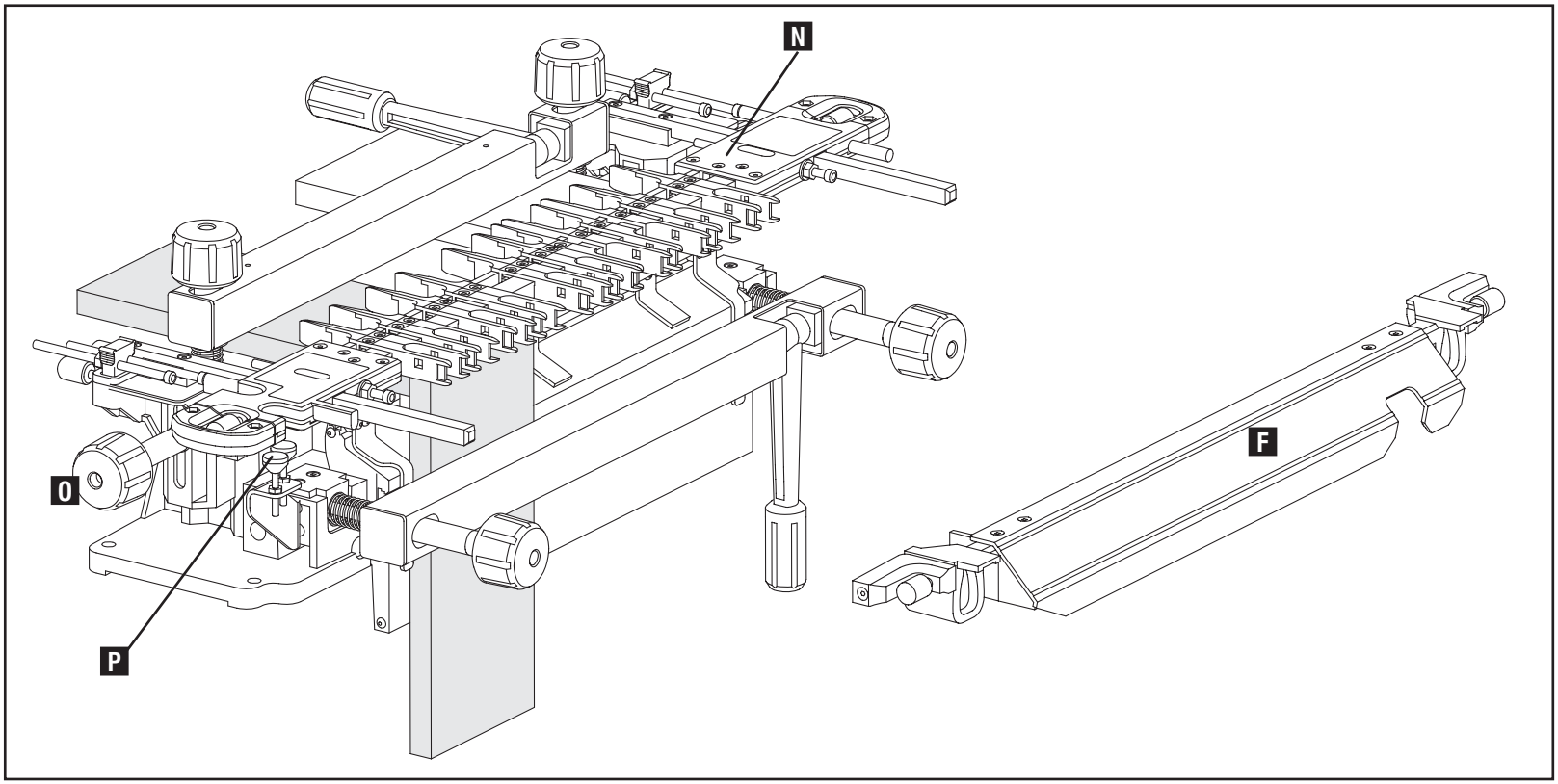

Fig. D8

13. Slowly lower bit (Q) Fig. D9 onto stop. Depth is set when bit barely touches the stop.

⚠WARNING: Before making any cuts, be sure you read your router owner's manual for safe operating instructions.

14. Set router onto stabilizer bar with bit between bar and workpiece.

NOTE: Cleaning out the scrap area first helps reduce tear out.

15. Make the cut. Be sure to cut only between the rounded edges (S) Fig. D10, not between the square ones (T). Make small passes, moving from left to right within fingers.
16. Remove tailboard (I).

CUTTING PINBOARD

1. Remove stabilizer bar and remove template. Flip template (N) Fig. D11 over and replace it back on the OMNIJIG® so the red "A Pins" label (Y) is located at the upper left side.

NOTE: The horizontal scrap board (H) can remain if your tailboard and pinboard are the same thickness. If not, then replace the horizontal scrap board with one that is the same thickness as the tailboard.

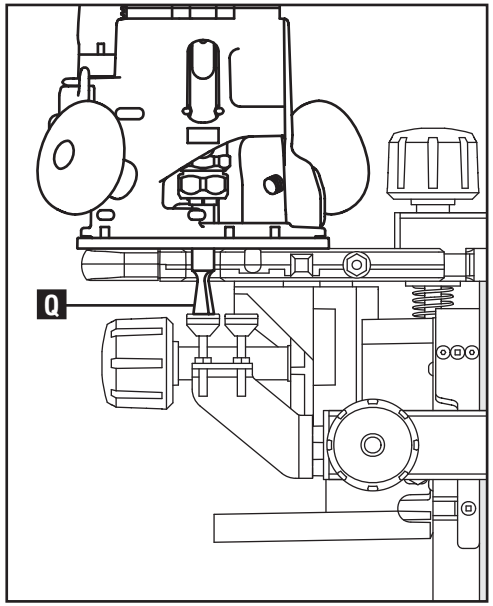

Fig. D9

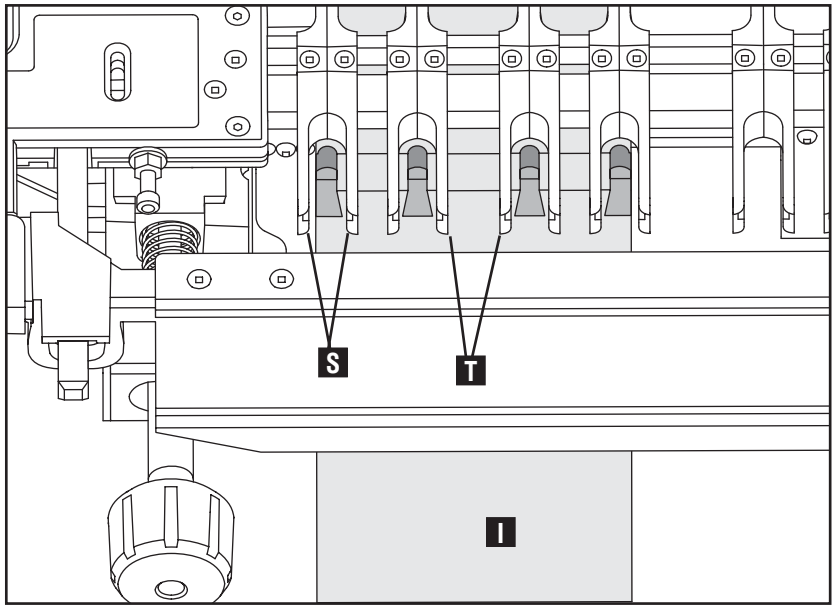

Fig. D10

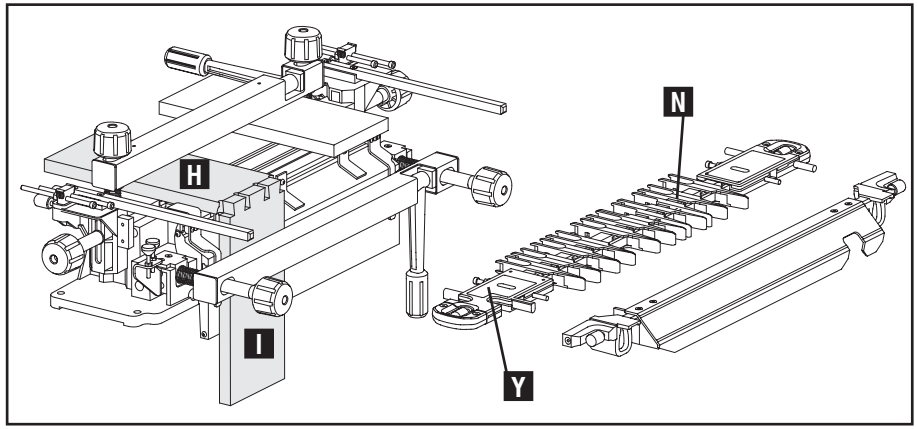

Fig. D11

2. Mount the pinboard (U) Fig. D12 with the “outside surface" facing away from the jig. Be sure it is flush against the left offset guide (J). Mount the template (M) and be sure the end of the pinboard (U) is flush against the bottom of the template.
3. Replace the stabilizer bar (F).
4. Select your proper straight router bit and template guide according to the Dovetail Setup Guide.
5. Set the router bit depth (as previously described) using the proper depth gauge. (P)
6. Make the cut. Be sure to cut only between the angled fingers (GG) Fig. D13, not between the straight ones (FF). Make small passes, moving from left to right within fingers.

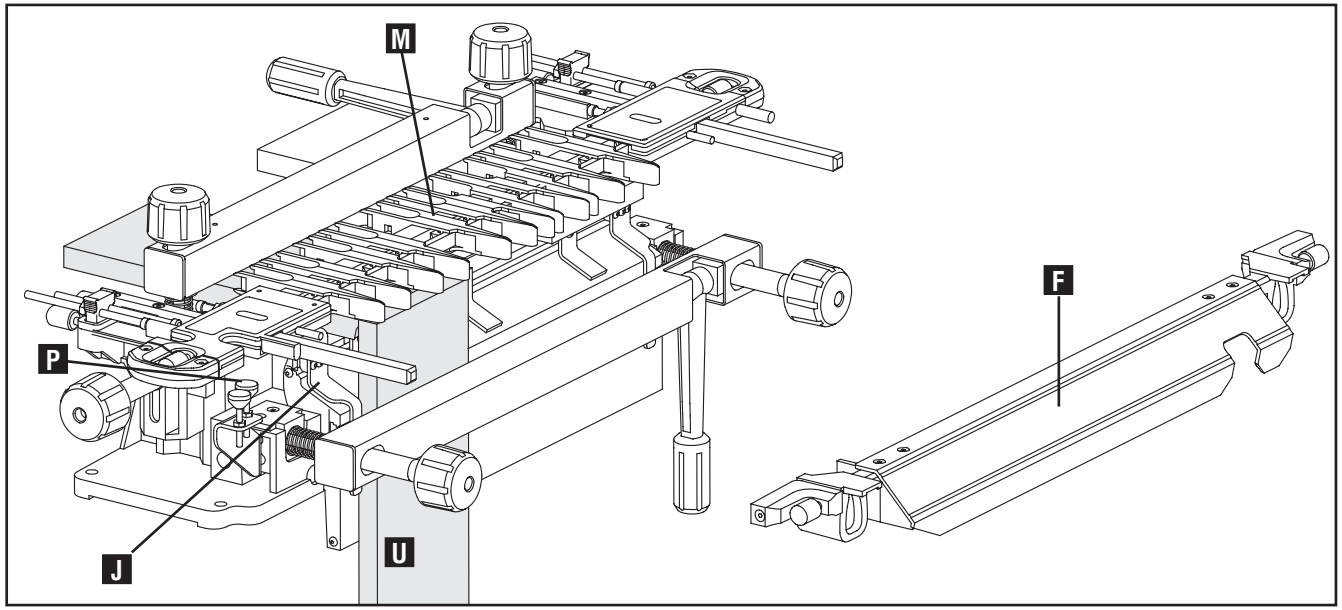

Fig. D12

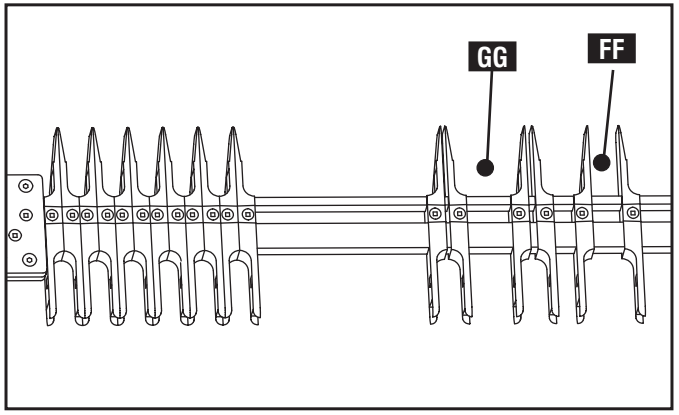

Fig. D13

FITTING THE JOINT

Adjustments may need to be made depending on the resulting fit of the through dovetail joint.

TIGHTNESS

The fix for a tight or loose joint can be found on the “A Pins" label (Fig. D14) of the variable fingers template. If the joint needs to be looser, the stops need to be adjusted by loosening hex nut (W) Fig. D15 and turning stop screw (X) clockwise so the stop will move back slightly. If the joint needs to be tighter, turn the screw (X) counter-clockwise so the stop will move forward slightly. After this fix, replace the template on new stop positions and re-cut the pinboard.

NOTE: This tightness fix is for the pinboard only. If you make this adjustment, you don't have to re-cut the tailboard.

FLUSHNESS OF THE TAILBOARD

PROUD: Looking at the tailboard (A) Fig. D16, if the end grain is proud (sticking out above the other board as shown in Fig. D16) then the cut on the tailboard needs to be shallower. To correct, decrease the depth of cut of the router bit.

RECESSED: If the end grain on the tailboard (A) Fig. D17, is recessed (or sunk below the other board as shown in Fig. D17), then the cut on the tailboard needs to be deeper. To correct, increase the depth of cut of the router bit.

NOTE: If you make this fix, you only need to re-cut the tailboard after you make the router bit adjustment.

FLUSHNESS OF THE PINBOARD

PROUD: Looking at the pinboard (B) Fig. D16, if the end grain is proud (sticking out above the other board as shown in Fig. D16) then the cut on the tailboard needs to be shallower. To correct, decrease the depth of cut of the router bit.

RECESSED: If the end grain on the pinboard (B) Fig. D17 is recessed (or sunk below the other board as shown in Fig. D17), then the cut on the tailboard needs to be deeper. To correct, increase the depth of cut of the router bit.

NOTE: If you make this fix, you only need to re-cut the pinboard after you make the router bit adjustment.

NOTE: After making the adjustments to the router’s depth of cut, you can use the router’s new depth of cut to reset the router bit depth gauge at the end of the template's left side for future reference if similar cuts are to be made.

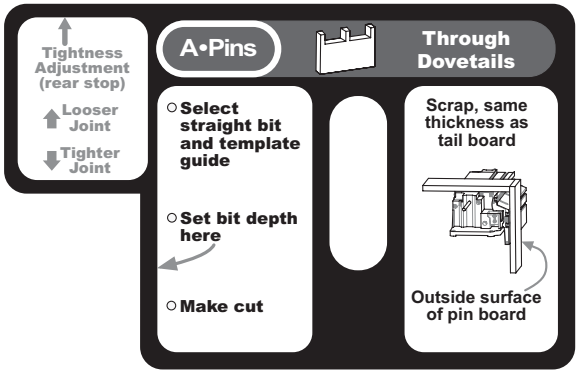

Fig. D14

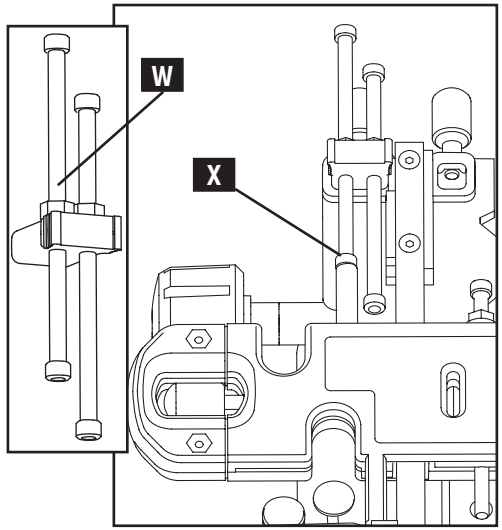

Fig. D15

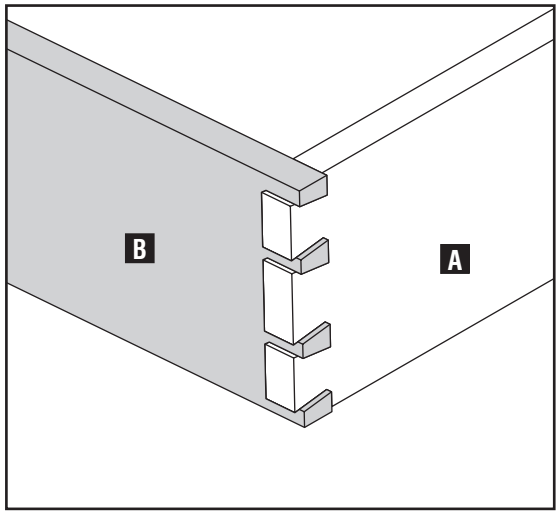

Fig. D16

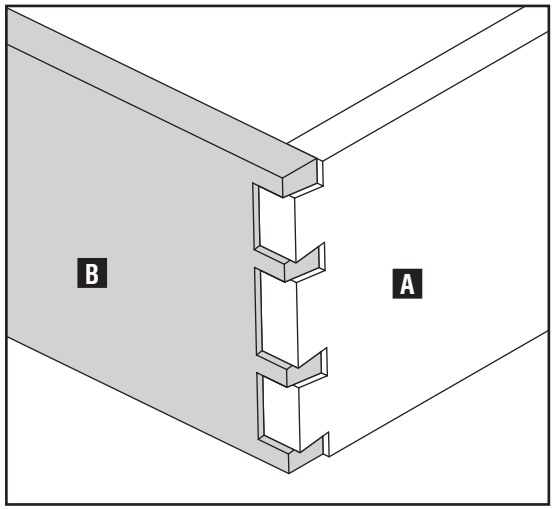

Fig. D17

Variable-Spaced Half-Blind Dovetails

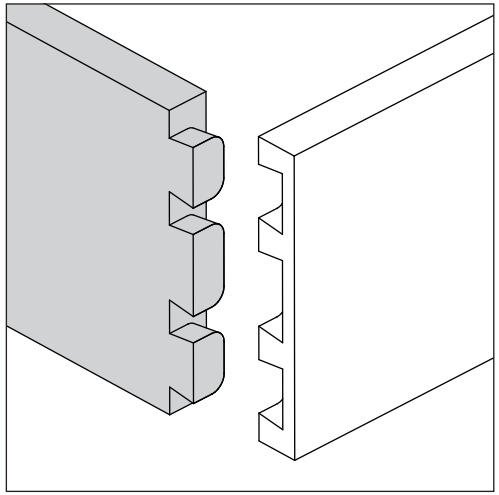

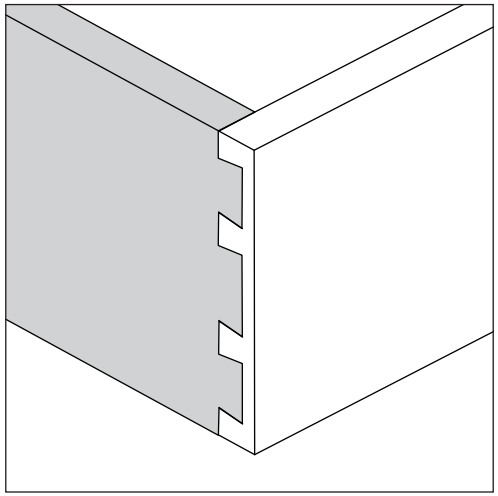

ITEMS NEEDED

On the OMNIJIG®, variable-spaced half-blind joints can be cut using the variable finger template (regular or miniature). The joints are made by cutting the pinboard (drawer front) (A) Fig. E1 first and then the tailboard (drawer side) (B) Fig. E2.

Noting your desired tail height, check your **"Dovetail Setup Guide"** for specific router bits, template guides and stops needed. Instructions for using this guide can be found in the "BASIC OPERATIONS" chapter.

NOTE: The regular variable finger template comes standard with the 24" OMNIJIG®, and is available as an accessory for the 16" OMNIJIG®. A miniature variable-finger template is available for both the 24" and 16" Omnijigs®.

SETTING UP AND MAKING THE CUT

For variable-spaced half-blind joints, the desired tail height needs to be smaller than the thickness of the pinboard (or drawer front, if you are making drawers).

Use the yellow on-board labels ("B Pins" and "B Tails") on the variable finger template for a guide as you follow these instructions.

These instructions are for cutting on both the regular size and miniature variable finger templates, except where noted.

CUTTING MINIATURE DOVETAIL JOINTS

For the miniature variable fingers, the fingers shown at (C) Fig. E3 are the proper fingers for doing variable-spaced half-blind joints.

If a finger set (D) Fig. E3 is separated, do not cut between straight edges (E) when making cut. Only cut between the angled edges (F).

On the mini fingers template, if the space (F) to be cut is greater than 5/8", you might find it desirable to make initial passes using the D4 router bit and G1 template guide. After the bulk of the material has been removed, finish the cut with the appropriate template guide and bit. Doing this prolongs the life of bits used to make miniature dovetails.

To set the depth of cut for the miniature variable spaced half-blind joints, the user defined gauges in the router bit depth pod can be set to the measurements found in the "ROUTER BIT DEPTH POD SETTINGS" appendix in the back of the manual.

A NOTE ON TAIL THICKNESS

The OMNIJIG® comes set at the factory to create the optimal tail thickness when using 1/2" wood. If your stock is thicker or thinner than 1/2", you will need to make an adjustment to achieve your desired tail thickness. The adjustment is described in the "FITTING THE JOINT" section at the end of this chapter.

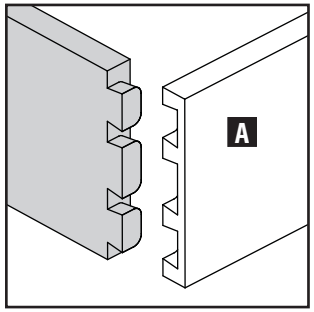

Fig. E1

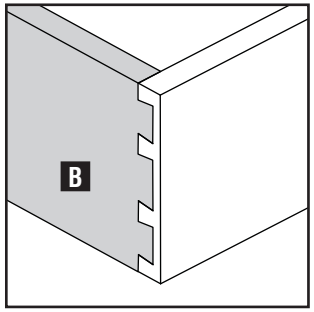

Fig. E2

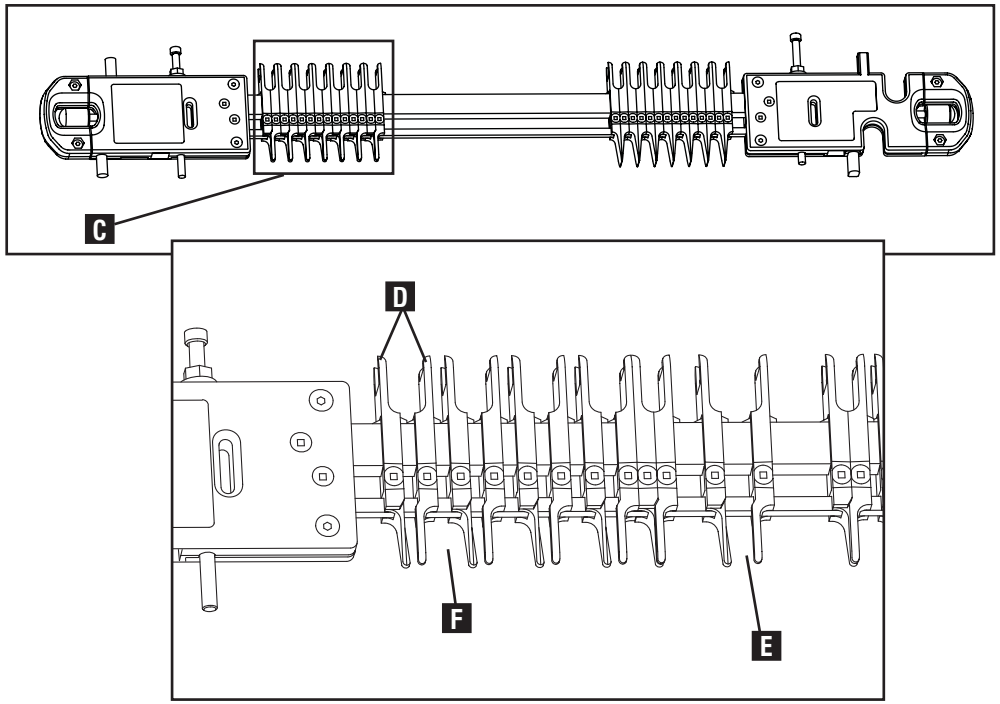

Fig. E3

CUTTING PINBOARD

1. Insert proper stops (G) Fig. E4 according to the Dovetail Setup Guide.
2. Remove stabilizer bar (H) and template (I).
3. Black edge guide (J) should be on left and silver edge guide (K) should be on the right.
4. Mount the pinboard (L) (drawer front) in the horizontal position with the "outside surface" facing down.

(REMINDER: Place a board of similar thickness horizontally at the other side of the jig for support.)

NOTE: "Outside surface" refers to the outer side of the box or drawer the board is used on.

5. Mount template onto the rods with the "B Pins" (yellow) label (M) facing up to the left side.
6. Slide in a scrap vertical piece (N) up against the template flush with the left guide.
7. Move the pinboard (horizontal piece) (L) forward against the vertical scrap (N) for position and then slide vertical piece down out of the way. Be sure the pinboard is flush with left edge guide (J).
8. Position the fingers using the square screwdriver.

NOTE: An 1/8" gap is recommended between the horizontal pinboard (L) and the fingers as shown at (O) and (P) Fig. E5. This will help maintain proper spacing at the corners.

NOTE: Before making cut, put at least one finger set (Q) 1-2 inches away from the right edge of the horizontal board for router stability.

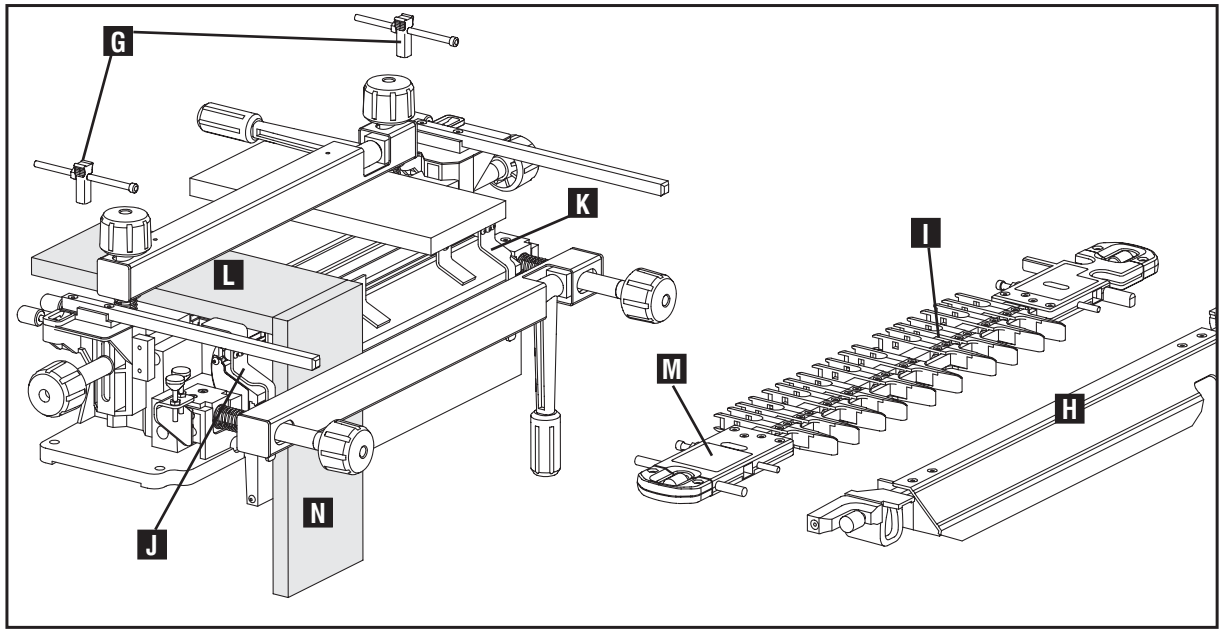

Fig. E4

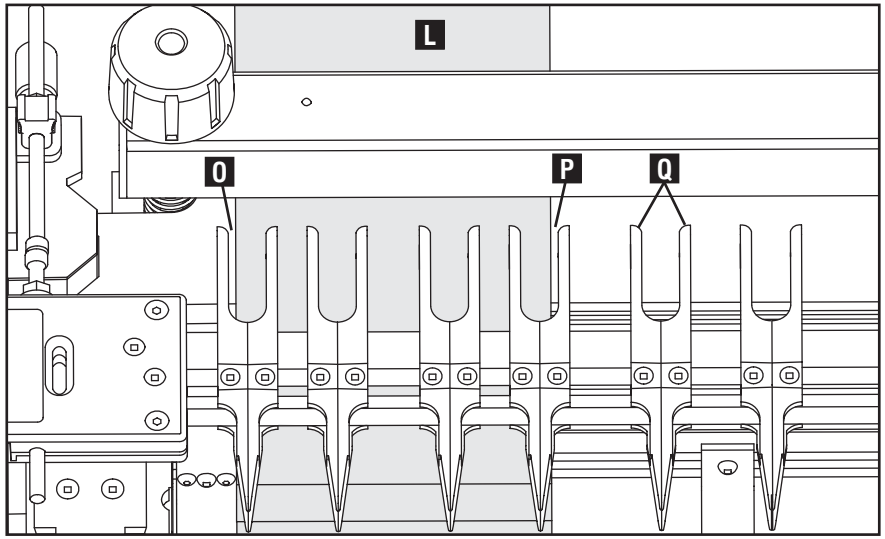

Fig. E5

9. Drop template (I) Fig. E6 down and tighten template lock knobs (one is shown at R). Replace stabilizer bar (H) and lock in place.
10. Using your selected tail height as reference, install proper dovetail bit and template guide according to the **"Dovetail Setup Guide."**
11. Set router bit depth using the variable-spaced half-blind router bit depth settings at (S) Fig. E6, which are standard on the 24" OMNIJIG.

NOTE: If you have a 16" OMNIJIG and are using the variable finger template, then use the depth gauges at (AA). These are the user defined gauges and need to be set according to the instructions found in the appendix. Or, refer to section below on how to set bit depth without using the gauges.

Use labels that identify your bit and template guide to determine which depth stop to use. Slowly lower bit onto the gauge (one is shown at T). Depth is set when bit barely touches the gauge.

⚠WARNING: Before making any cuts, be sure you read your router owner's manual for safe operating instructions.

(Skip to Step 12 if you are setting the bit depth with your router bit depth pod (S).)

SETTING BIT DEPTH WITHOUT USING GAUGE

NOTE: For setting the router bit depth without using the half-blind bit depth gauge:

a. Remove stabilizer bar.
b. Measure down from the top surface of the pinboard (L) Fig. E7 (which is mounted in horizontal position) and make a mark (U) at the end of the board the same distance as the tail height.
c. Set router on the template, lower bit to this mark and lock bit in place. (Fig. E8)
d. This method may require several test cuts.

⚠WARNING: Before making any cuts, be sure you read your router owner's manual for safe operating instructions.

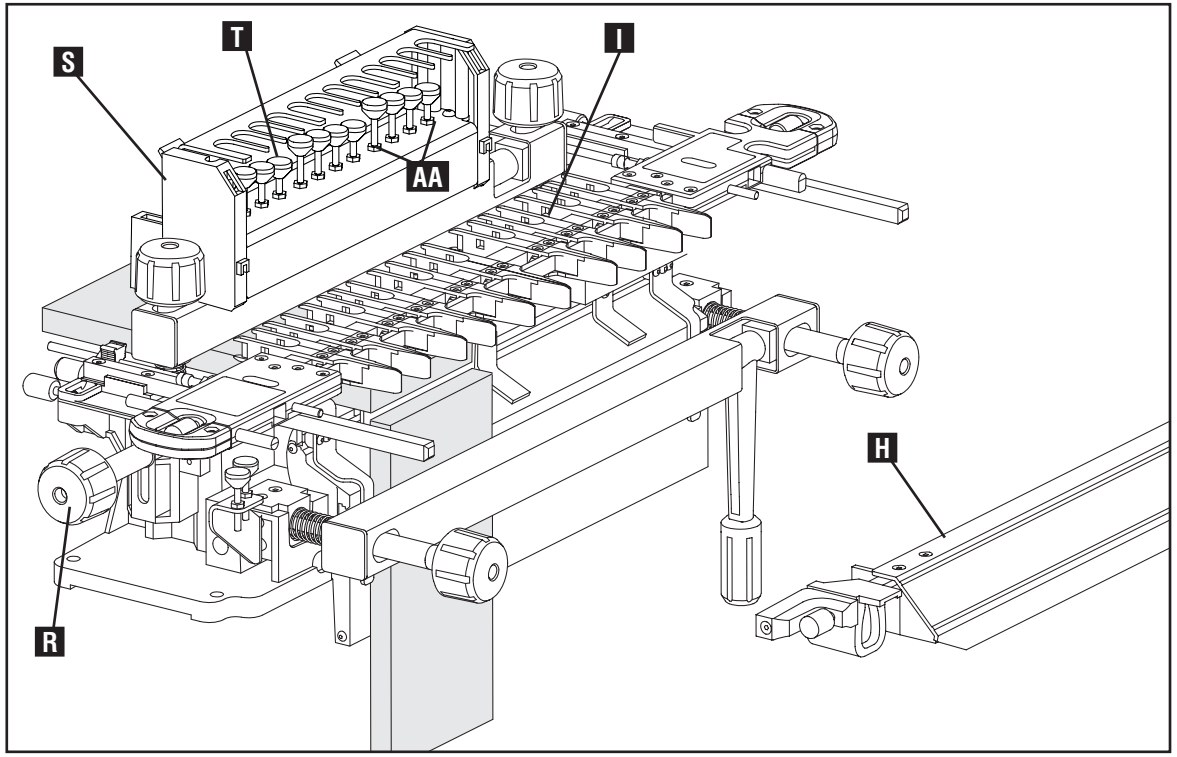

Fig. E6

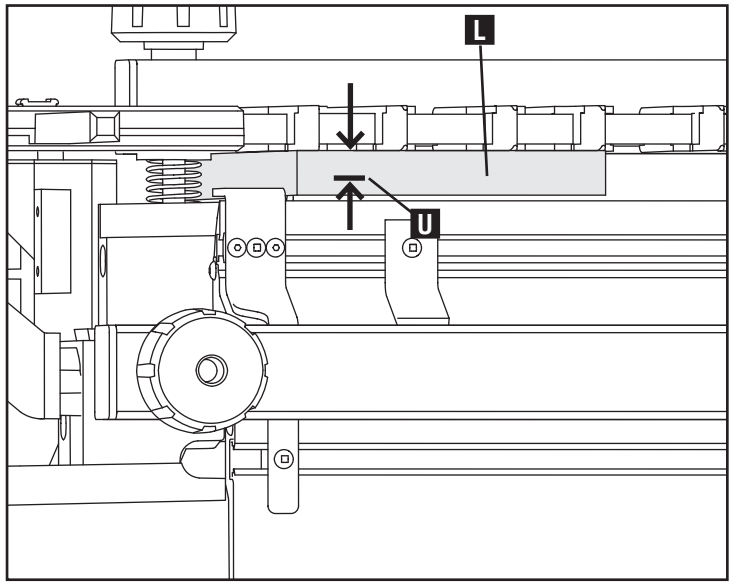

Fig. E7

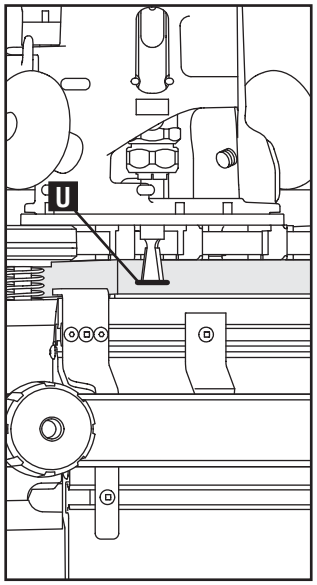

Fig. E8

12. Re-install stabilizer bar.
13. Set router onto stabilizer bar with bit between bar and the workpiece and make the cut.

NOTE: If you have separated a finger set, be sure to cut only between the angled walls, not between the straight ones. (Fig. E9)

NOTE: Move router slowly from left to right, taking small cuts and multiple passes. Your final cut should resemble Fig. E10.

14. Remove pinboard (L) Fig. E10.

CUTTING TAILBOARD

1. Remove stabilizer bar (H) Fig. E11 and remove template (I).
2. Put horizontal scrap (X) into the jig.
3. Put the template back onto the jig so the yellow "B Tails" label (V) is located at the upper left side.
4. Slide vertical tailboard (drawer side) (W) in up against the lowered template (I) (shown out of the way for clarity). Be sure the tailboard is oriented with the "outside surface" facing the base. Slide a piece of horizontal scrap (X) into place behind the vertical piece to help reduce tearout.

NOTE: "Outside surface" refers to the outer side of the box or drawer the board is used on.

5. Be sure vertical board (W) is lined up flush against the left edge guide (J).
6. Use the same router bit, template guide and router bit depth that was used to cut the pins.

⚠WARNING: Before making any cuts, be sure you read your router owner's manual for safe operating instructions.

NOTE: If desired, before making the cut, create 1/2" x 1/2" wood spacers (DD) Fig. E12 and insert them between adjacent fingers. (Place them between the square corners (EE), where you are not cutting.) This will keep the router from cutting into the tails and removing excess material.

7. Replace the stabilizer bar.
8. Climb cut from right to left slowly along face of the board, then clean out the proper areas moving slowly from left to right. Be sure to cut only between the rounded edges, not between the square ones. (Fig. E12)
9. The final cut should look like cut shown in Fig. E13.

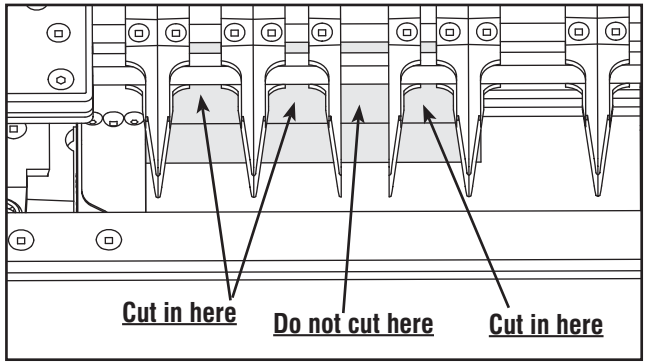

Fig. E9

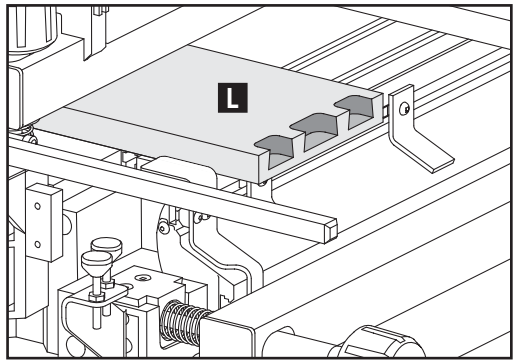

Fig. E10

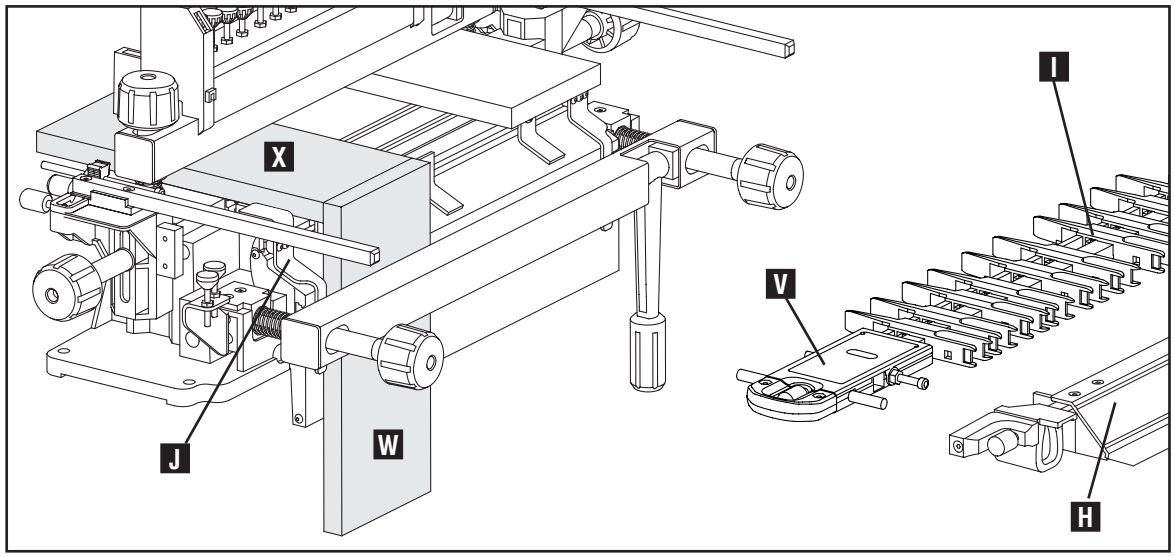

Fig. E11

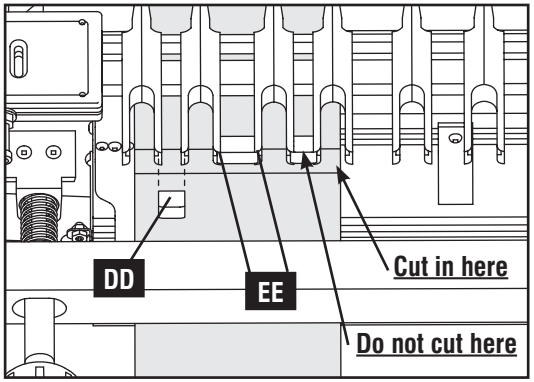

Fig. E12

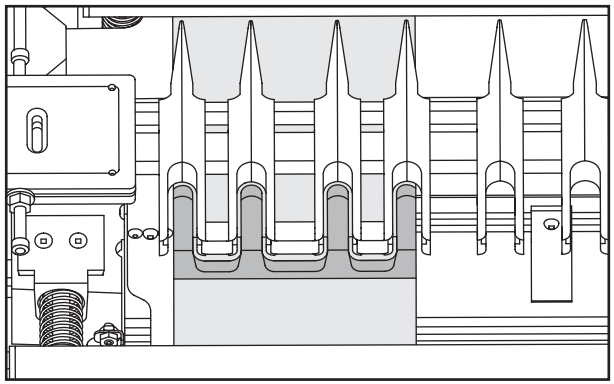

Fig. E13

FITTING THE JOINT

Adjustments may need to be made depending on the resulting fit of the joint. If all of the problems below apply, fix them in the order listed below.

1. TIGHTNESS OF FIT

To adjust for tightness of joint fit, see the diagram on the half-blind bit depth gauge (Fig. E14). A shallower bit depth will make a looser joint. A deeper bit depth will make a tighter joint.

RE-CUTTING THE BOARDS
After making the adjustment, the boards need to be squared off and the joints re-cut.

2. FLUSHNESS

If the end grain of the pinboard (A) is recessed (too low, as shown in Fig. E15) or if it is too proud (too high, as shown in Fig. E16), the template can be adjusted to fix this.
NOTE: For recessed joints, the fix below will adjust the stops so you can push the template back further before re-cutting. For proud joints, the fix will adjust the stops so the template will be brought forward before re-cutting.

TO CORRECT RECESSED PINBOARD: Loosen hex nut (GG) Fig. E17 and turn stop screw (FF) Fig. E17 or E18 **clockwise** if the joint is recessed.

TO CORRECT PROUD PINBOARD: Loosen hex nut (GG) Fig. E17 and turn stop screw (FF) Fig. E17 or E18 **counter-clockwise** if the joint is proud.

NOTE: The steps above are also detailed on the template label "B Tails".

RE-CUTTING THE BOARDS
After making the adjustment, the boards need to be squared off and the joints re-cut.
NOTE: Be sure to replace the template (D) Fig. E18 firmly against new stop positions before making the router cut.

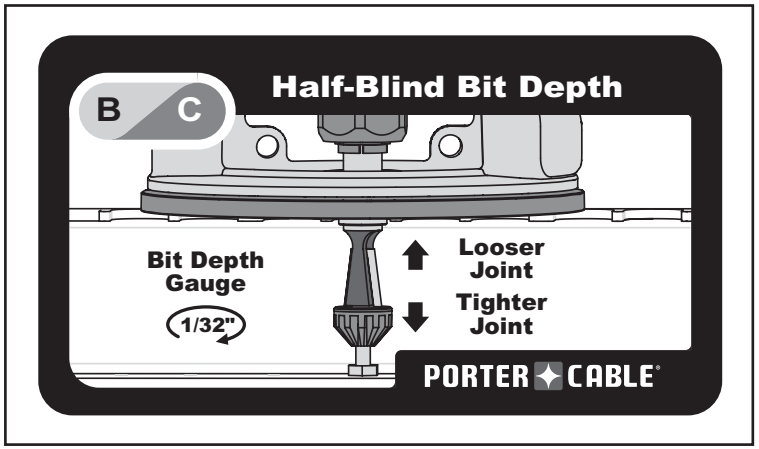

Fig. E14

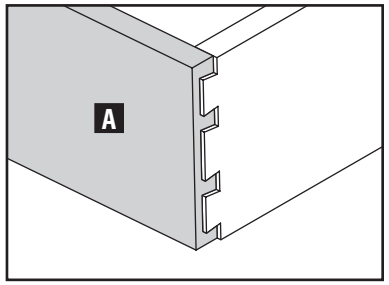

Fig. E15

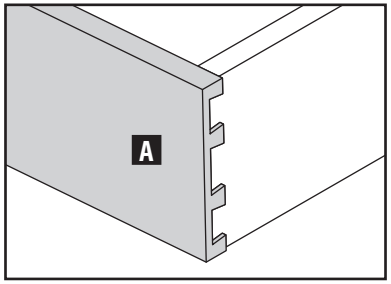

Fig. E16

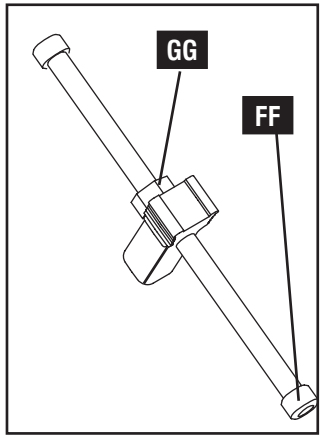

Fig. E17

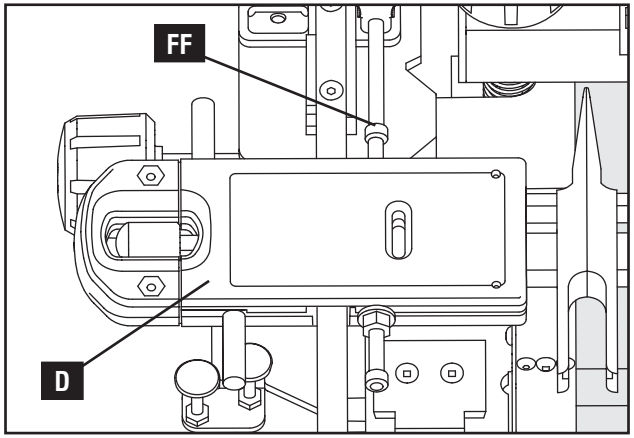

Fig. E18

3. TAILBOARD THICKNESS

The OMNIJIG® is set to create the optimal tail thickness when using 1/2" thick wood. Fig. E19 shows a representation of 1/2" wood with this optimal tail thickness.

NOTE: For the fix below, be sure the template is placed on the jig with the label "B TAILS" (DD) Fig. E25 up and to the left.

USING TAILBOARDS THICKER THAN 1/2"

If your stock is thicker than 1/2" (and you do not make this adjustment) you may end up with the improper tail thickness shown in Fig. E20, which is an example using 1" stock. The proper tails for 1" thick wood should resemble the tailboard shown in Fig. E21.

To fix the tails on thicker material, the template needs to be brought forward so that the gap (AA) is about 1/8".

NOTE: In Fig. E24, (BB) is the front edge of the fingers and (CC) is the front edge of the vertical board.

TO FIX: Loosen lock nut (Y) Fig. E25 and turn screw (Z) clockwise to bring template forward and fix the gap (AA) Fig. E24.

USING TAILBOARDS THINNER THAN 1/2"

If your stock is thinner than 1/2" (and you do not make this adjustment) you may end up with the improper tail thickness shown in Fig. E22, which is an example using 3/8" stock. The proper tails for 3/8" thick wood should resemble the tailboard in Fig. E23.

To fix the tails on thinner material, the template needs to be pushed back so that the gap (AA) is about 1/8".

NOTE: In Fig. E24, (BB) is the front edge of the fingers and (CC) is the front edge of the vertical board.

TO FIX: Loosen lock nut (Y) Fig. E25 and turn screw (Z) counter-clockwise to push template back and fix the gap (AA).

NOTE: Directions for improving the tail thickness are also detailed on the "B Tails" label (DD).

RE-CUTTING THE BOARDS

After making the adjustment, the boards need to be squared off and the joints re-cut.

NOTE: Be sure to replace the template (EE) Fig. E25 firmly against new stop positions before making the router cut.

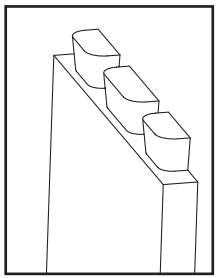

Fig. E19

Optimal tail thickness for 1/2" wood

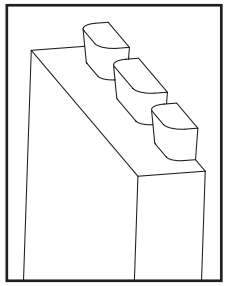

Fig. E20

Poor tail thickness for 1" wood

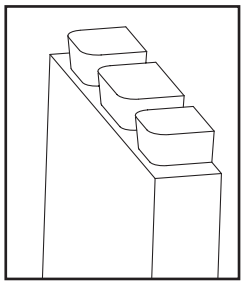

Fig. E21

Optimal tail thickness for 1" wood

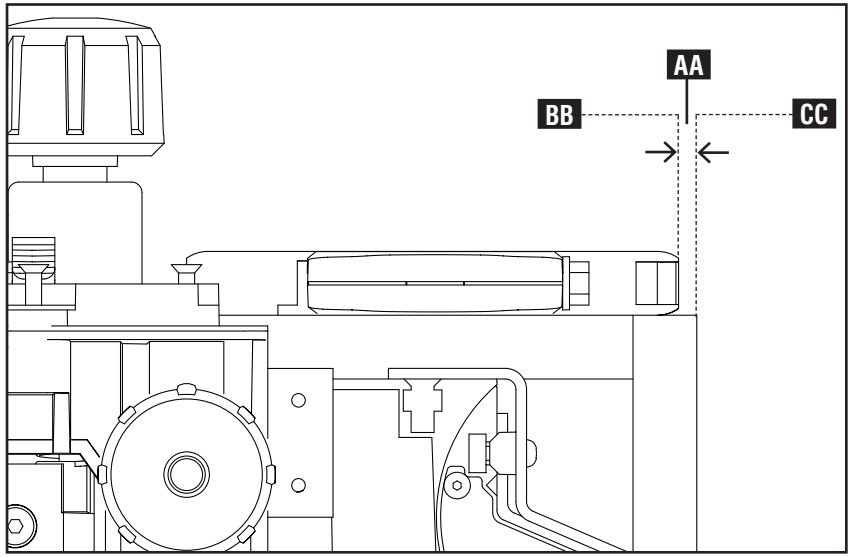

Fig. E24

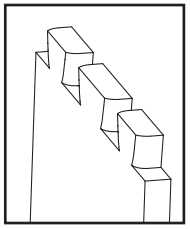

Fig. E22

Poor tail thickness for 3/8" wood

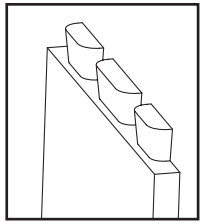

Fig. E23

Optimal tail thickness for 3/8" wood

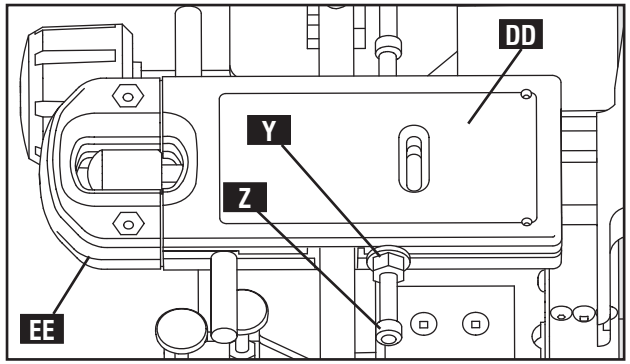

Fig. E25

Single-Pass Half-Blind Dovetails

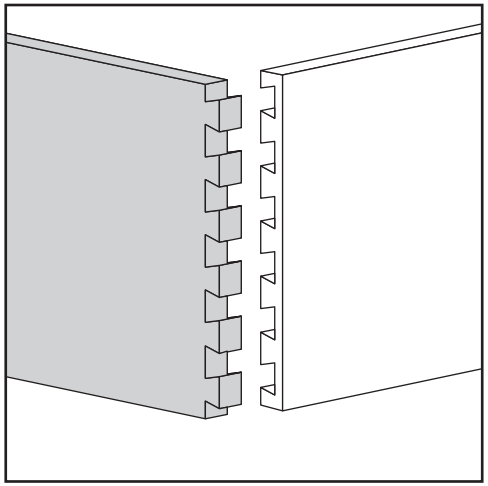

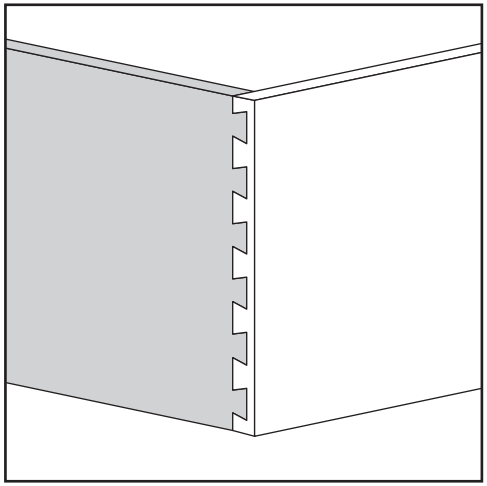

ITEMS NEEDED

On the OMNIJIG®, single-pass half-blind joints (which are most often used when making drawers) can be cut using the variable finger template and the single-pass half-blind/sliding tapered dovetail template. The joints are made by cutting the pinboard (drawer front) (A) Fig. F1 and F2 and the tailboard (drawer side) (B) at the same time.

For the 24" or 16" variable finger template, use the C1 left and right stops. Use a D4 router bit to make the cuts.

For the 24" or 16" fixed finger template, use the C2 left and right stops. Use a D4 router bit.
NOTE: The miniature variable fingers can't be used to make single-pass half-blind joints.

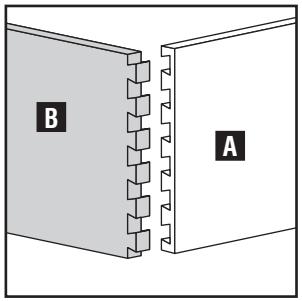

Fig. F1

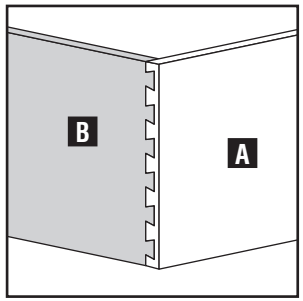

Fig. F2

For all templates, the template guide for cutting single-pass half-blind joints is selected from this chart according to your desired tail height:

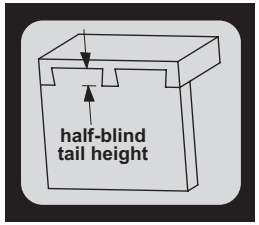

Tail height (approx.)	Template guide
1/4"	G2
3/8"	G3
1/2"	G4
5/8"	G5

OPTIMAL BOARD SIZES
When selecting boards for this joint, be sure the tail height is less than the pinboard thickness (C) Fig. F3.
Also, the tailboard (or drawer side) (D) can't be less than 1/2" thick. The tailboard and pinboard should be the same width.

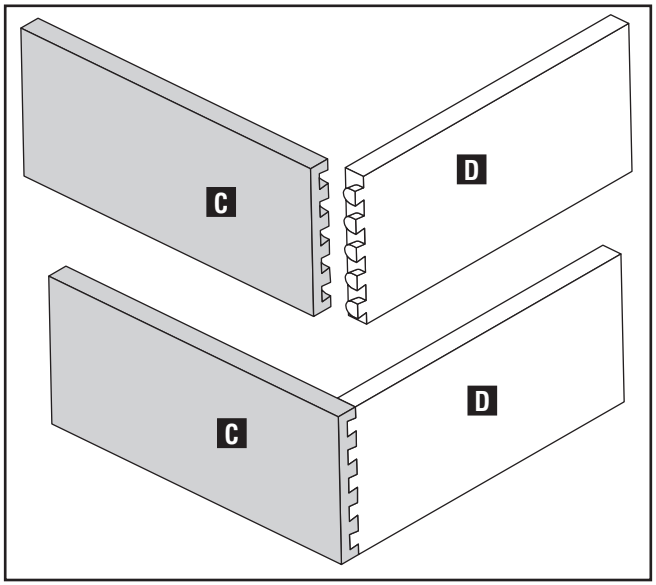

Fig. F3

While capacity for the jigs is between 8" and 24" (depending on which template you use), certain board widths are desirable because they will produce a more attractive joint. The optimal widths for creating half-blind dovetails are in 1" increments plus 1/4". (For example, 5-1/4", 6-1/4", 7-1/4", etc.) Other widths will work, but will not be as attractive.

NOTE: The maximum board widths for each template that can cut single-pass half-blind joints are:

- 8" for the 16" accessory variable finger template (Cat. No. 55161)
- 12" for the 24" standard variable finger template (Cat. No. 77241)
- 16" for the 16" standard fixed finger template. (Cat. No. 55168)
- 24" for the 24" accessory fixed finger template (Cat. No. 77248)

SETTING UP AND MAKING THE CUT

When cutting single-pass half-blind joints, the OMNIJIG® system provides on-board instruction labels to help guide you through the process. Use this list to find the proper label for your setup:

- **24" variable finger template**: Instructions on stabilizer bar
- **16" fixed finger template**: Instructions on stabilizer bar.
- **24" fixed finger template**: Instructions on template

ADDITIONAL SETUP NEEDED FOR THE VARIABLE FINGER TEMPLATES

If you have a variable finger template, follow these three steps to prepare the template before continuing:

- Mount template with “A Tails" label (N) Fig. F4 placed up and to the left.
- Loosen all finger screws (one is shown at (O)) and slide all fingers to the left.
- Remove set screw, which is located at (P) Fig. F5 at the end of bar (Q). Slide bar all the way through holes in fingers and replace set screw (P). Then tighten finger screws (O). Be sure set screw (P) and (R) Fig. F6 are in place so bar does not slide out.

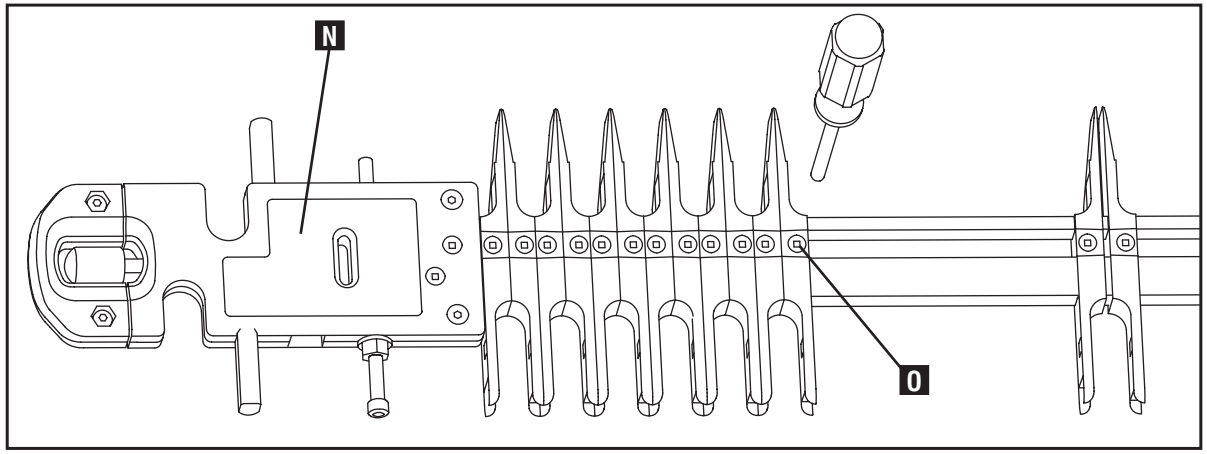

Fig. F4

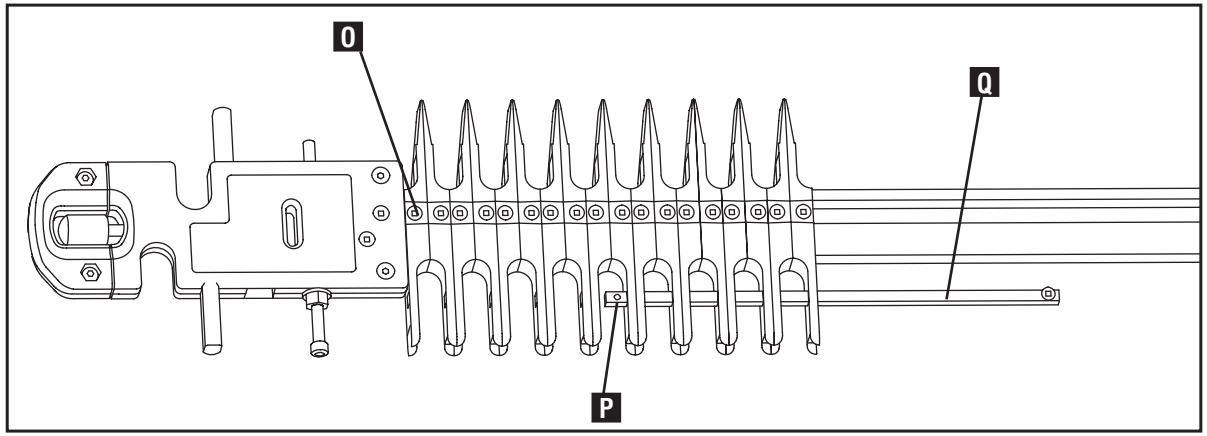

Fig. F5

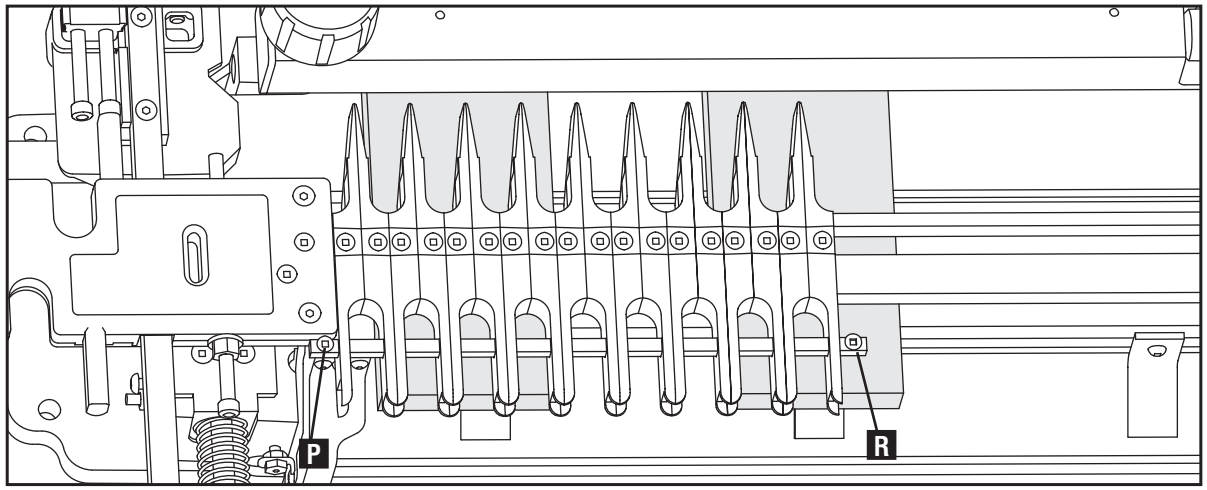

Fig. F6

SETUP AND CUTTING FOR BOTH TEMPLATES

1. Remove stabilizer bar (F) Fig. F7 and template (M).
2. Set black edge guide (H) to right and silver edge guide (I) to the left.
3. Insert proper stops (J).
4. Put pinboard (drawer front) (K) in the horizontal position with “outside surface" facing the jig. Don’t worry about position at this point, but don’t let the board go beyond the front edge of the base (L).
5. Mount template (M).

NOTE: Mount fixed finger templates as shown in Fig. F7.

6. Make sure similar thickness scrap (S) is in the other side and clamp the template down.

NOTE: For the variable-spaced finger template, be sure the scrap is supporting the end of the finger set (T) Fig. F8.

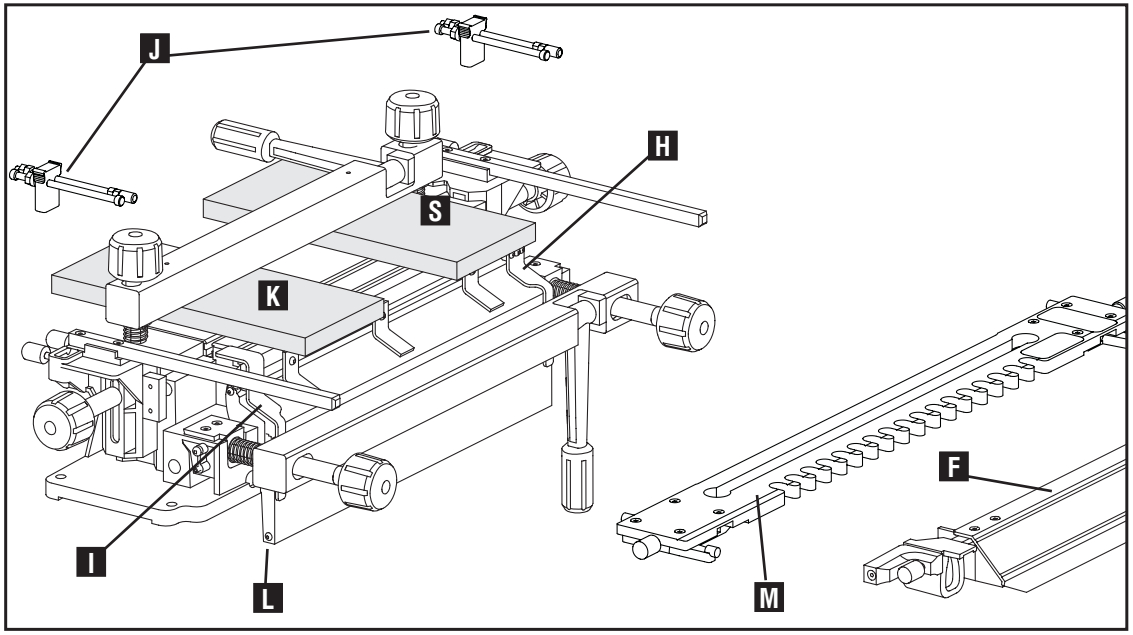

Fig. F7

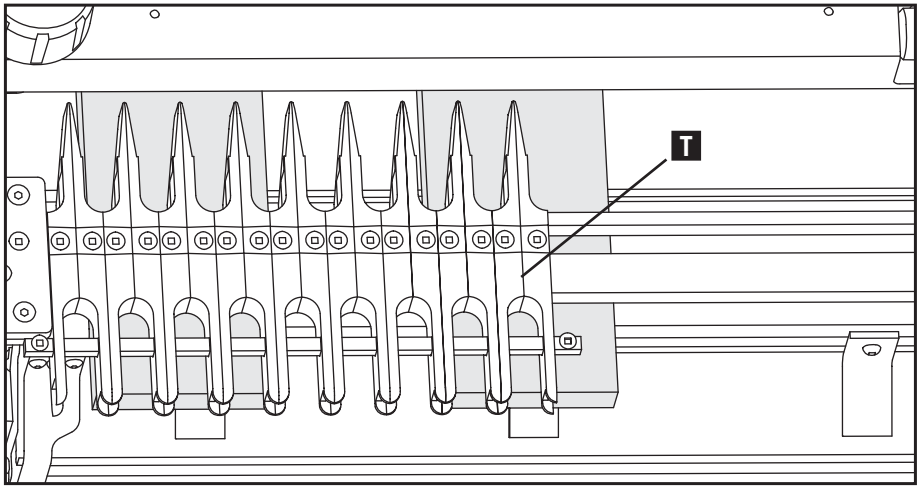

Fig. F8

7. Loosen silver left edge guide (I) Fig. F9 with square driver and move it to the far left position.
8. Slide tailboard (drawer side) (U) Fig. F10 up into the vertical position with the “outside surface" facing the jig and flush with the template above. Center and clamp the tailboard as far to the left as possible, as shown in Fig. F10. Be sure the gap at (V) is equal to the gap at (W).
9. Move the silver left edge guide (I) Fig. F11 to the right so it is flush with the left edge of the vertical tailboard (U). Tighten the guide.

NOTE: The tailboard can’t be less than 1/2" thick.

10. Unclamp the horizontal pinboard (K) Fig. F12 and slide it forward so that it is flush against the vertical tailboard (U) and flush against the silver left edge guide (I).
11. Replace stabilizer bar (F) Fig. F13.
12. Check earlier section in this chapter, the router bit depth pod label or the Dovetail Setup Guide to select proper router bit and template guide.
13. To set router bit depth:

- If using the 24" OMNIJIG® with the standard variable finger template, then use one of four depth gauges located at (V) Fig. F13
- If you are using the accessory 24" half-blind/ sliding tapered template (77248), the "user defined" (AA) bit depth gauges or the "single-pass/half-blind" bit depth gauges (V) will need to be manually set according to instructions included in the appendix.
- If using a 16" OMNIJIG with the standard half-blind/sliding tapered template, then the router bit depth should be set using one of four depth gauges located at (W) Fig. F14.

NOTE: When using these built in gauges, use labels that identify your bit and template guide to determine which router bit depth gauge to use. Slowly lower bit onto gauge. Depth is set when bit barely touches the gauge.

NOTE: Consult the "**SETTING BIT DEPTH WITHOUT USING GAUGE**" section in the "VARIABLE-SPACED HALF-BLIND chapter for directions on setting the bit depth without using a gauge.

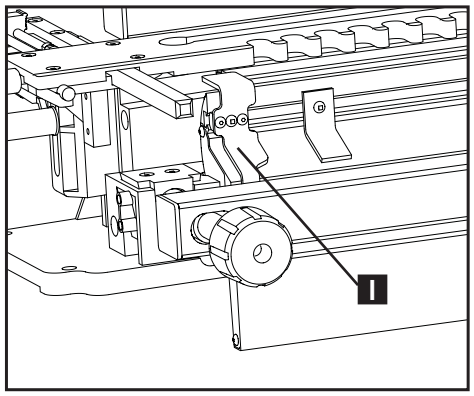

Fig. F9

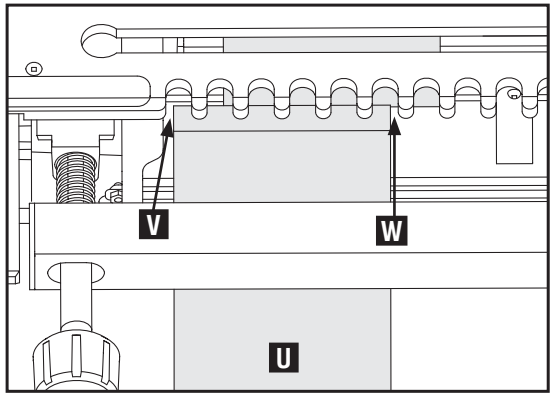

Fig. F10

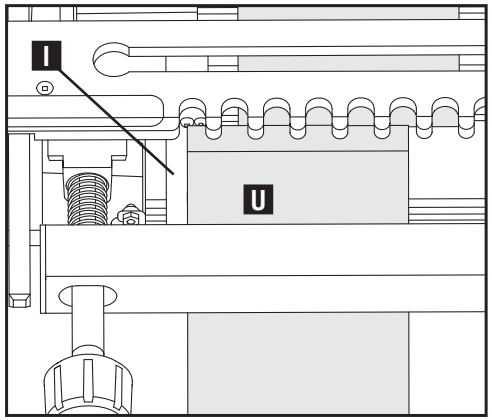

Fig. F11

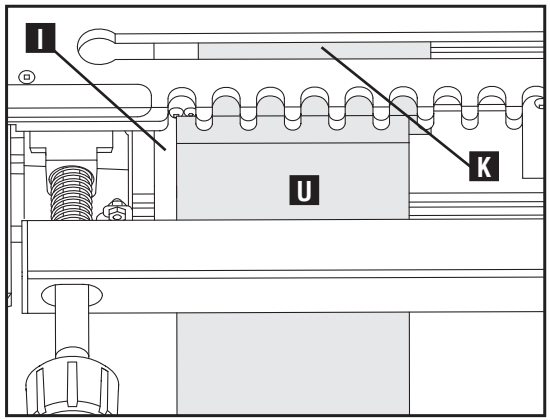

Fig. F12

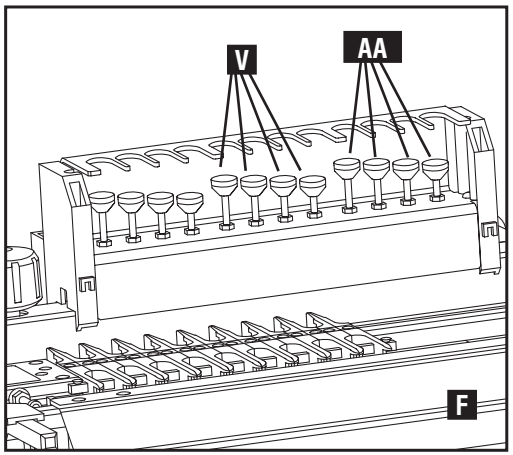

Fig. F13

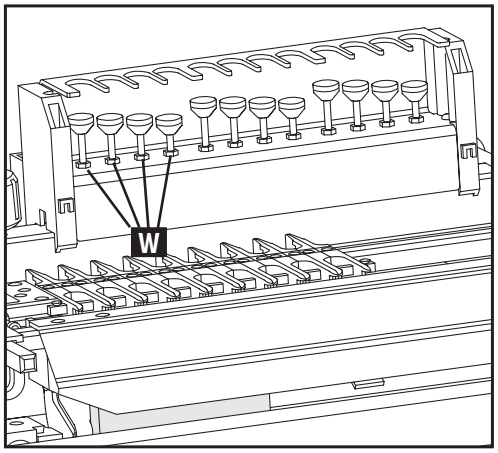

Fig. F14

⚠WARNING: Before making any cuts, be sure you read your router owner's manual for safe operating instructions.

14. Set router onto stabilizer bar with bit between bar and the workpiece and make the cut. Make a slow climb cut from right to left along vertical tailboard. Then clean out all gaps in both boards moving slowly from left to right. Final cut should look like Fig. F15.

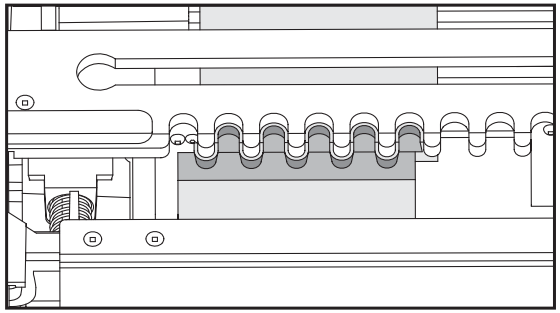

Fig. F15

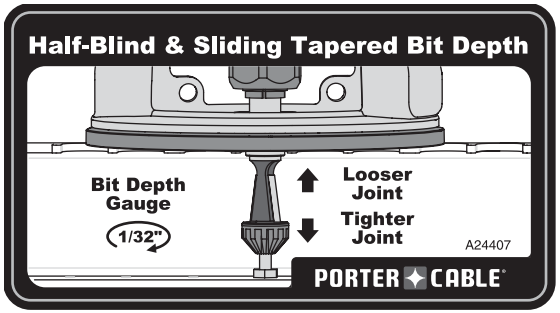

Fig. F16

FITTING THE JOINT

TIGHTNESS OF FIT

To adjust for tightness of fit, see the diagram on the half-blind bit depth gauge (Fig. F16). A shallower bit depth will make a looser joint. A deeper bit depth will make a tighter joint.

FLUSHNESS

If the end grain of the pinboard (A) is **recessed** (too low, as shown in Fig. F17) or if it is too **proud** (too high, as shown in Fig. F18), the template can be adjusted to fix this.

NOTE: For recessed joints, the fix below will adjust the stops so you can push the template back further before re-cutting. For proud joints, the fix will adjust the stops so the template will be brought forward before re-cutting.

TO CORRECT ON VARIABLE FINGER TEMPLATE: Loosen the appropriate hex nut (Y) Fig. F19 and turn stop screw (X) Fig. F19 or Fig. F20 **clockwise** if the joint is recessed and **counter-clockwise** if the joint is proud.

TO CORRECT ON FIXED FINGER TEMPLATE: Loosen appropriate hex nut (Y) Fig. F19 and turn stop screw (Z) Fig. F19 or Fig. F20 **clockwise** if the joint is recessed and **counter-clockwise** if the joint is proud.

NOTE: The steps above are also detailed either on your stabilizer bar or your template, depending on which OMNIJIG® setup you have.

RE-CUTTING THE BOARDS

After making the adjustment, the boards need to be squared off and the joints re-cut.
NOTE: Be sure to replace the template (D) Fig. F20 firmly against new stop positions before making the router cut.

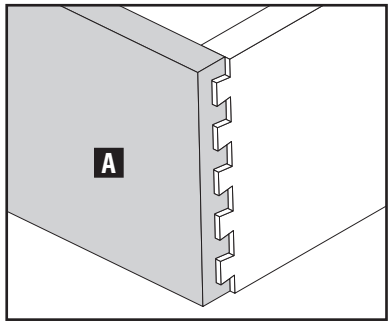

Fig. F17

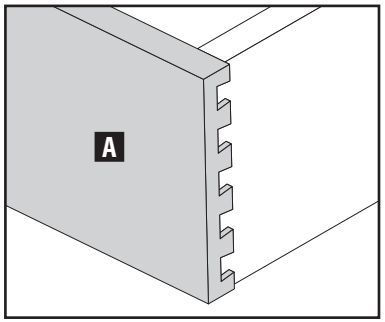

Fig. F18

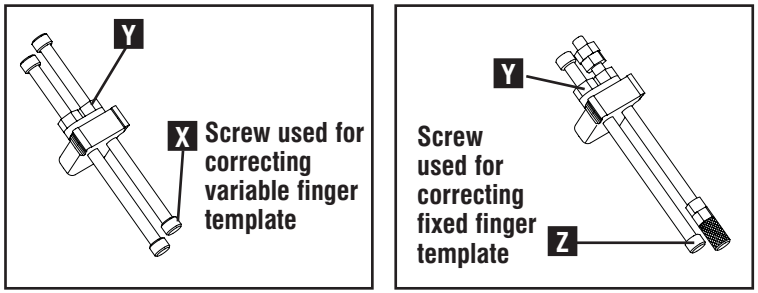

Fig. 19

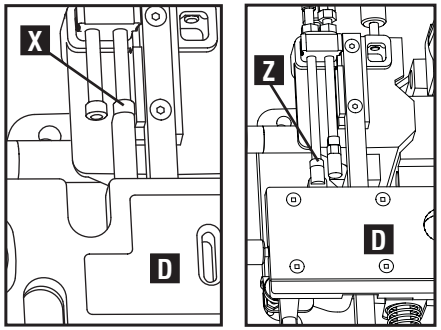

VARIABLE FIXED

Fig. F20

Rabbeted Half-Blind Dovetails

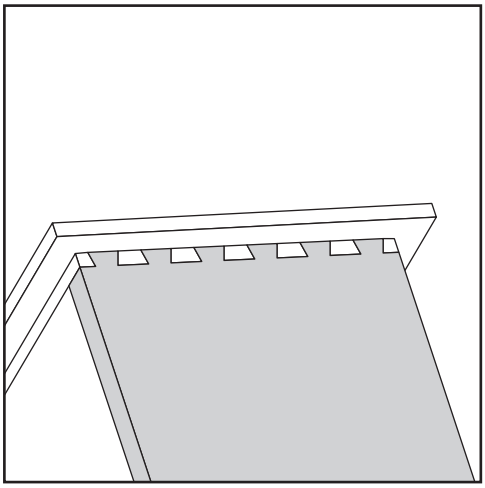

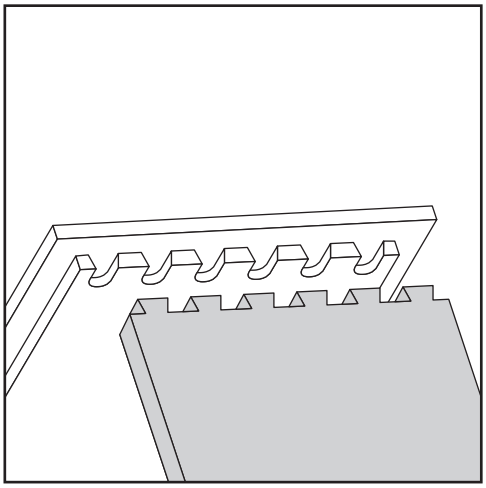

RABBETED HALF-BLIND JOINTS

Rabbeted half-blind dovetails are often used to create drawer fronts (H) Fig. G1 that have a rabbeted (or lipped) edge.

NOTE: Many of the steps used on the OMNIJIG® when cutting other kinds of half-blind joints are also used to cut the rabbeted half-blind joint. So, be sure to read the previous sections, "VARIABLE HALF-BLIND JOINTS" and "SINGLE-PASS HALF-BLIND JOINTS" before continuing with these instructions.

SETTING UP (FOR ALL TEMPLATES)

Before making a rabbeted half-blind joint, you must first create these items:
NOTE: The instructions in this chapter are assuming your rabbet width (A) Fig. G2 is the same on all four sides.

- A drawer front board that is **rabbeted** as shown in Fig. G1.
- A **rabbeted setup block** (E) Fig. G3, where (A) Fig. G3 is equal to your rabbet width (A) Fig. G2.
- A **spacer setup block** (C) Fig. G3 that is as wide as (A), your rabbeted width.

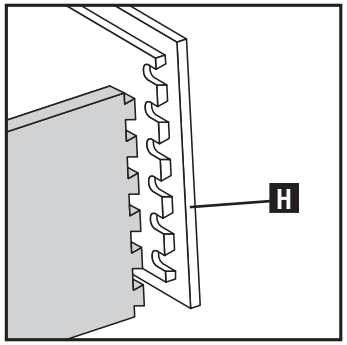

Fig. G1

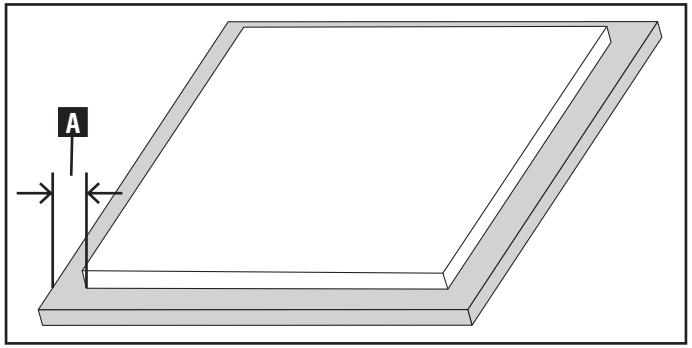

Fig. G2

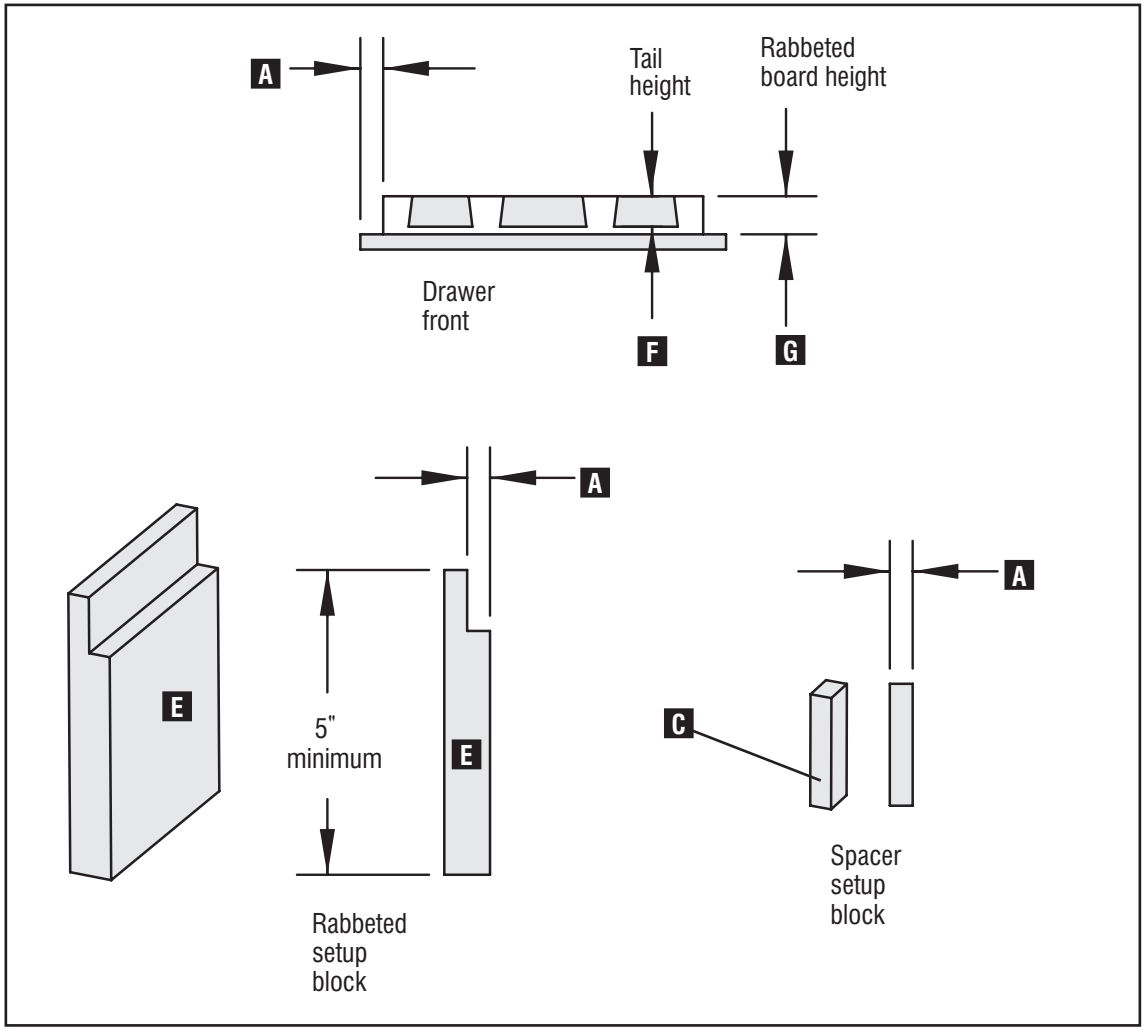

Fig. G3

SETTING UP AND CUTTING THE JOINT (VARIABLE FINGER TEMPLATES)

NOTE: Before proceeding, consult the variable-spaced half-blind instructions (or the labels on the unit) for proper set-up.

CUTTING THE PINBOARD

1. Clamp the rabbeted pin board (drawer front) (H) Fig. G4 in the horizontal position with the “outside surface" against the jig’s base. Make sure board is flush with the edge guide (I).
2. Mount rabbeted setup block (E) Fig. G5, vertically with the rabbeted edge facing the horizontal workpiece.
3. Bring the pinboard (H) forward so it just touches the setup block (E).
4. Remove setup block (E).

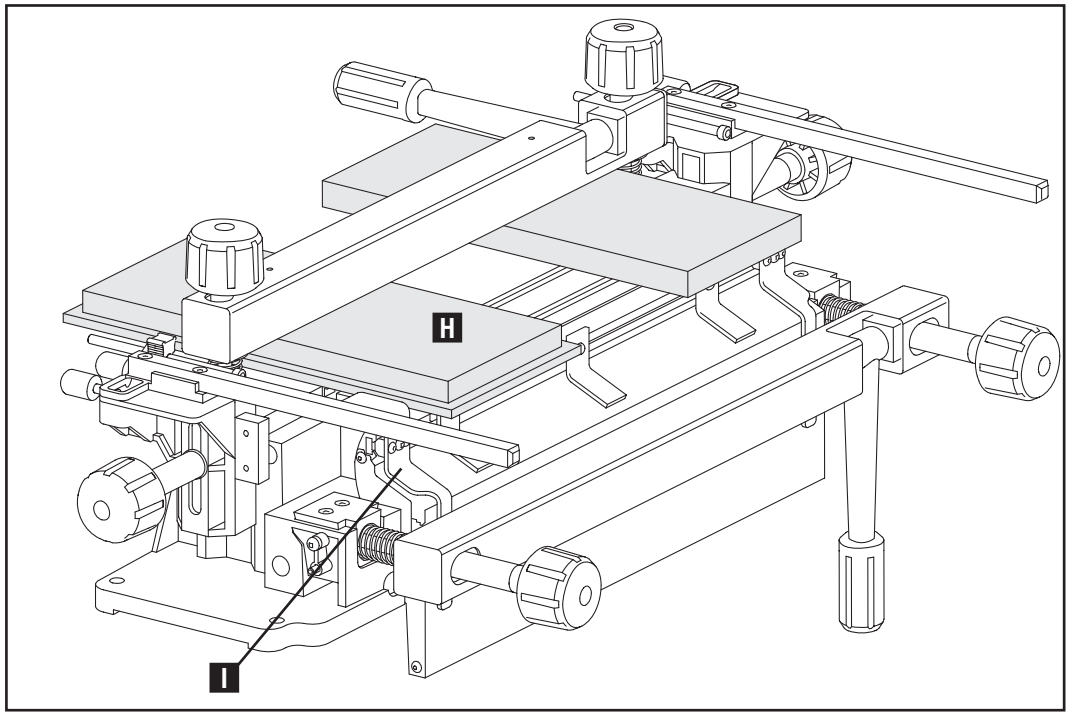

Fig. G4

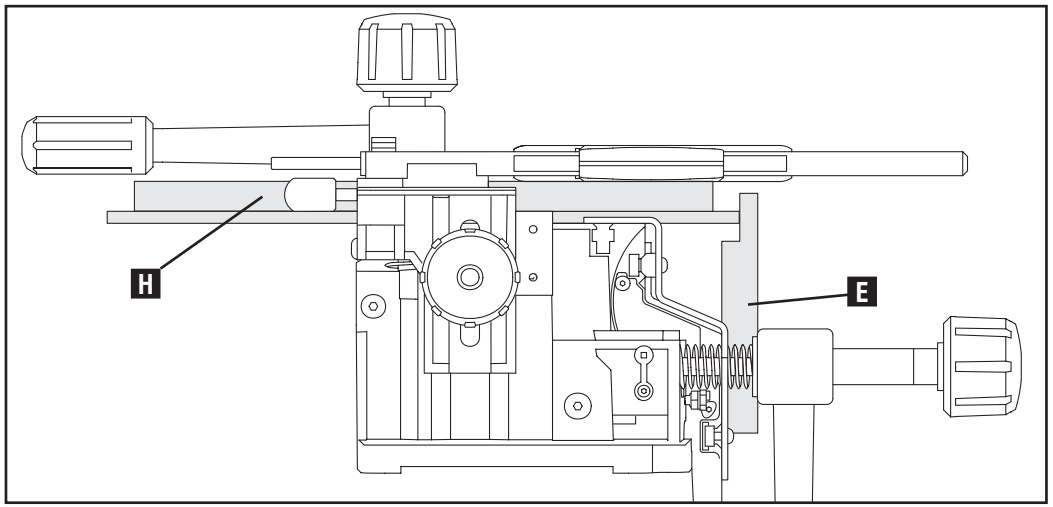

Fig. G5

NOTE: Be sure to space the fingers (J) around the tall edges (K) of the workpiece, as shown in Fig. G6. Maintain 1/8" gap at (L).

⚠WARNING: Before making any cuts, be sure you read your router owner's manual for safe operating instructions.

NOTE: Remember that the tail height (F) Fig. G7 (or router bit depth) can't be greater than the height of the rabbet (G).

4. Make the cut using instructions included in the variable-spaced half-blind joint section. Final cut should look like Fig. G8.

CUTTING THE TAILBOARD

1. Be sure pinboard is removed and template is flipped over so "B Tails" label is showing on top left side.
2. Place scrap boards - one is shown at (N) Fig. G9 - in horizontal position and bring template down.
3. Place your spacer setup block (C) Fig. G9 flush against left edge guide (I).
4. Position the tail board (drawer side) (B) Fig. G9 in vertical position flush against the spacer and up against the template with "outside surface" against the jig.
5. Position the horizontal scrap board (N) Fig. G9 forward against the back edge of the tailboard (to help reduce tear-out).

⚠WARNING: Before making any cuts, be sure you read your router owner's manual for safe operating instructions.

6. Make your cut, according to your instructions for variable-spaced half-blind joints. Final cut should look like Fig. G10.

TIP FOR COMPLETING A FULL HALF-BLIND DRAWER

If you are making a drawer that has half-blind joints at all corners and you want to retain the same finger spacing all the way around, use the spacer (C) Fig. G9 when cutting the back pinboard. When mounting the back drawer pinboard horizontally, simply offset the board using the spacer in between the board and the left edge guide before tightening the workpiece and making the cut.

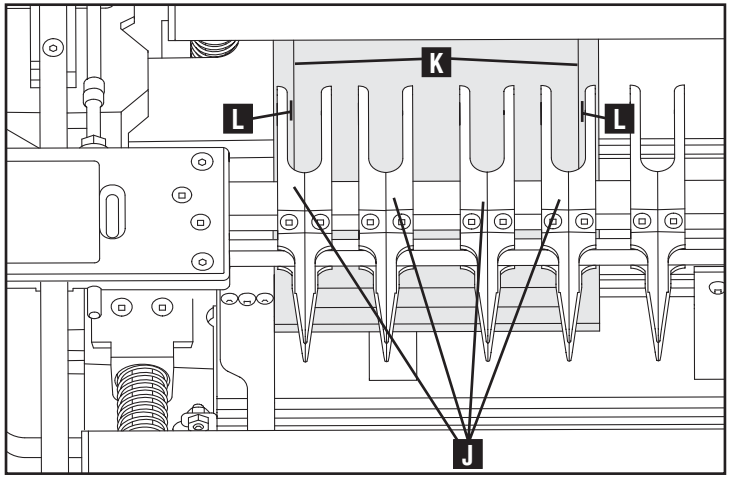

Fig. G6

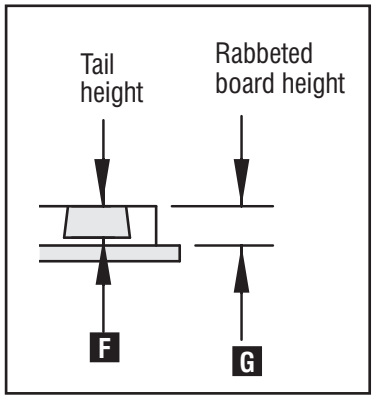

Fig. G7

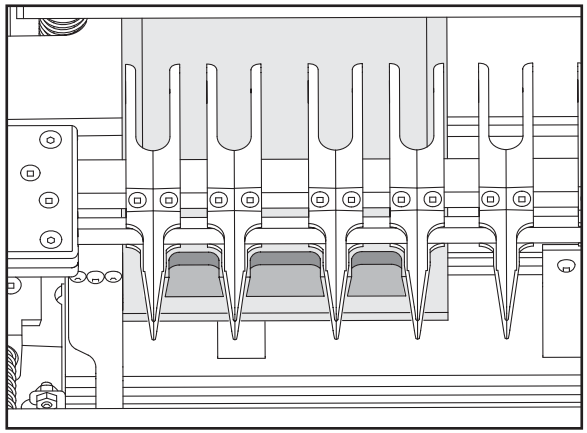

Fig. G8

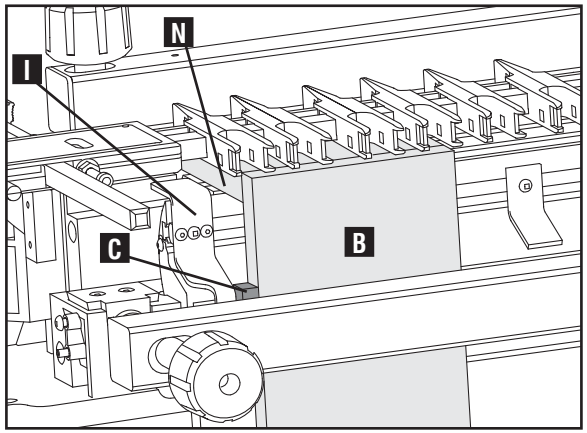

Fig. G9

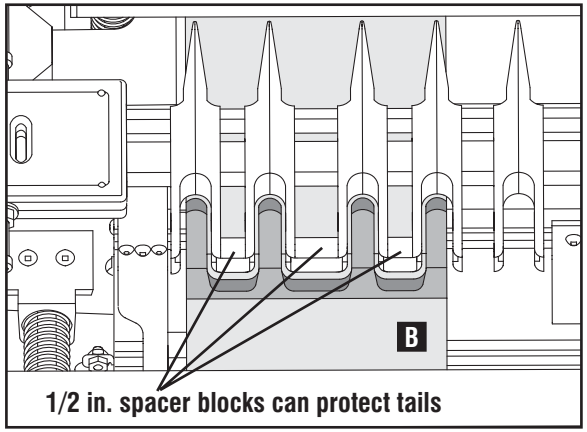

Fig. G10

SETTING UP AND CUTTING THE JOINT (SINGLE-PASS HALF-BLIND/SLIDING TAPERED DOVETAIL TEMPLATE)

NOTE: Before proceeding, consult the single-pass half-blind instructions (or the labels on the unit) for proper set-up and other guidance.

CUTTING TAILBOARD

1. Mount proper size scrap in horizontal position.
2. Position the tailboard (B) Fig. G11 vertically and make sure it is spaced below the fingers with even gaps, as described in the "Single-Pass Half-Blind Dovetails."
3. After the tailboard (B) is positioned and firmly up against the template, place and hold spacer setup block (C) against the tailboard. Then, slide left edge guide (P) into place and lock it in flush with the spacer.
4. Slide horizontal scrap forward, flush with left edge guide (P) and flush with back of vertical tailboard (B) to help reduce tearout.

⚠WARNING: Before making any cuts, be sure you read your router owner's manual for safe operating instructions.

5. Select proper bits and template guides. Make cut as described in previous chapters.

CUTTING PINBOARD

1. Remove tailboard (B).
2. When positioning the pinboard (H) Fig. G12 with fixed finger template, the rabbeted spacer board is not needed but can be used if desired. Be sure horizontal scrap is in position to the other side.
3. When placing the pinboard (H) in horizontal mount, slide the board forward until the rabbeted edge (Q) is lined up with scribed half-blind alignment line (R) and flush against the left edge.

NOTE: Remember that tail height (F) Fig. G13 can't be greater than the rabbet's height (G).

⚠WARNING: Before making any cuts, be sure you read your router owner's manual for safe operating instructions.

4. Make cut as described in previous chapters.

FITTING THE JOINT

For joint fitting adjustments, consult the other half-blind joint chapters, depending on the template being used.

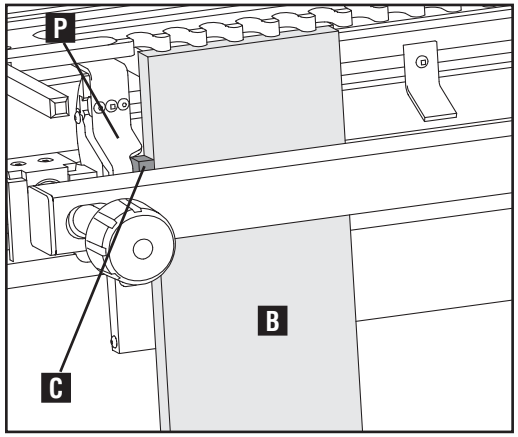

Fig. G11

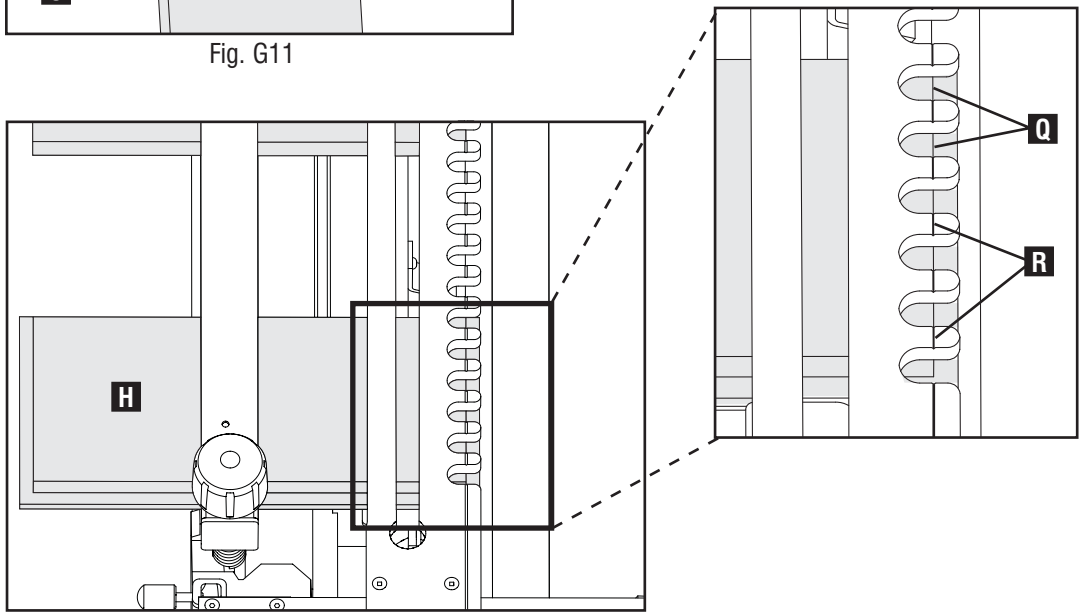

Fig. G12

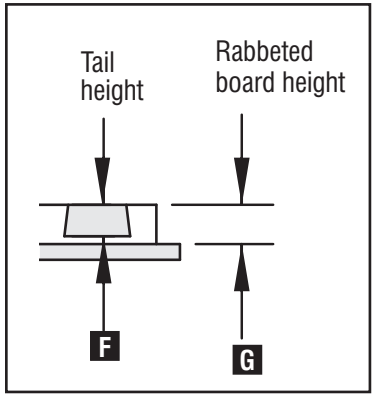

Fig. G13

Sliding Tapered Dovetails

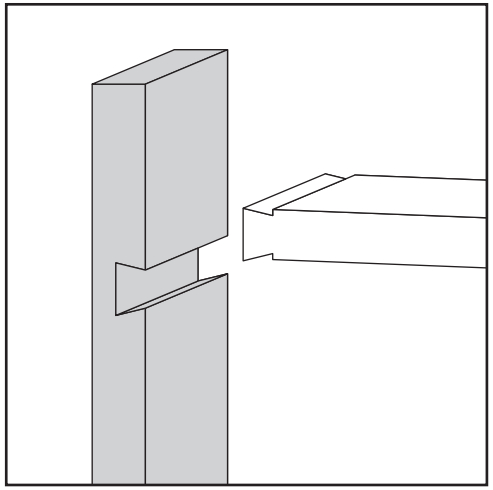

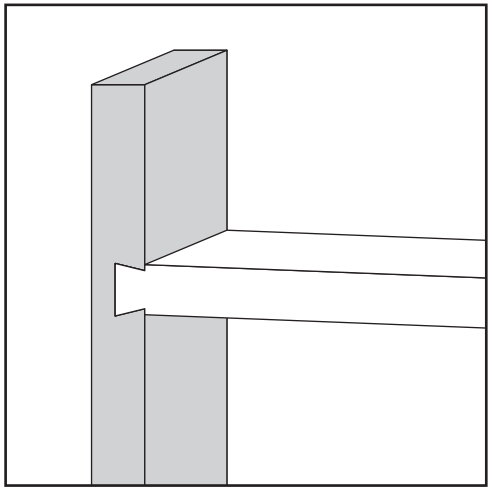

ITEMS NEEDED

Sliding tapered dovetails are often used to create shelves. This joint is created with a slightly tapered dado (A) Fig. H1 and a tenon (B) that is similarly tapered. The taper keeps the joint from tightening until the last few inches, making assembly easier.

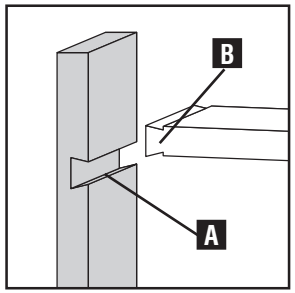

Fig. H1

You will need:

- The single-pass half-blind/sliding tapered dovetail fixed finger template (Fig. H2)
- Stops C2
- D4 dovetail bit
- The appropriate template guide. (The template guide depends on your depth of cut. A chart later in this chapter will guide your selection.)

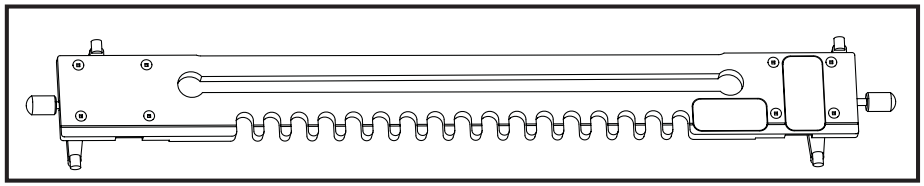

Fig. H2

BOARD SPECIFICATIONS

To ensure proper strength for common applications, here are specifications for your boards:

- The tenon board (B) Fig. H1 needs to be at least 5/8" thick.
- The dado board (A) needs to be at least 1/2" thick.
- Boards used should be the same width.

IMPORTANT

The stops are set to accommodate 3/4" thick tenon boards. If a different thickness is to be used, the template stops will need to be adjusted. For stock greater than 3/4" thick the right stops will need to be moved forward to have the effect of bringing the template forward. If the board is less than 3/4" thick, the same stops are moved backwards.

PROJECT LAYOUT

The sliding tapered dovetail dado is often used for creating shelves. The steps needed to prepare a shelf project using the OMNIJIG® JOINERY SYSTEM are provided below.

Refer to Figure H3 throughout this example. H3 demonstrates how finished work pieces would be assembled while giving a general idea of how the shelf would look.

A typical shelf project will have two vertical side panels with several individual shelves, as shown in Fig. H3. Label the left vertical panel "A1," the right vertical panel "A2," and the individual shelves starting with "B1" as the bottom shelf, "B2" as the next higher shelf, etc. On each vertical panel, mark the rear edge, top edge, and outside surface. On each individual shelf, mark the rear edge, top surface, and bottom surface.

The marks you make will be used in orienting the boards when clamped to the Omnijig. The marks will also guide you in assembling your completed shelves.

For the vertical panels (A1 and A2), the dados are cut on the inside surfaces. These panels are mounted horizontally on the jig with the outside surface facing down and the rear edge aligned to the right side of the jig base.

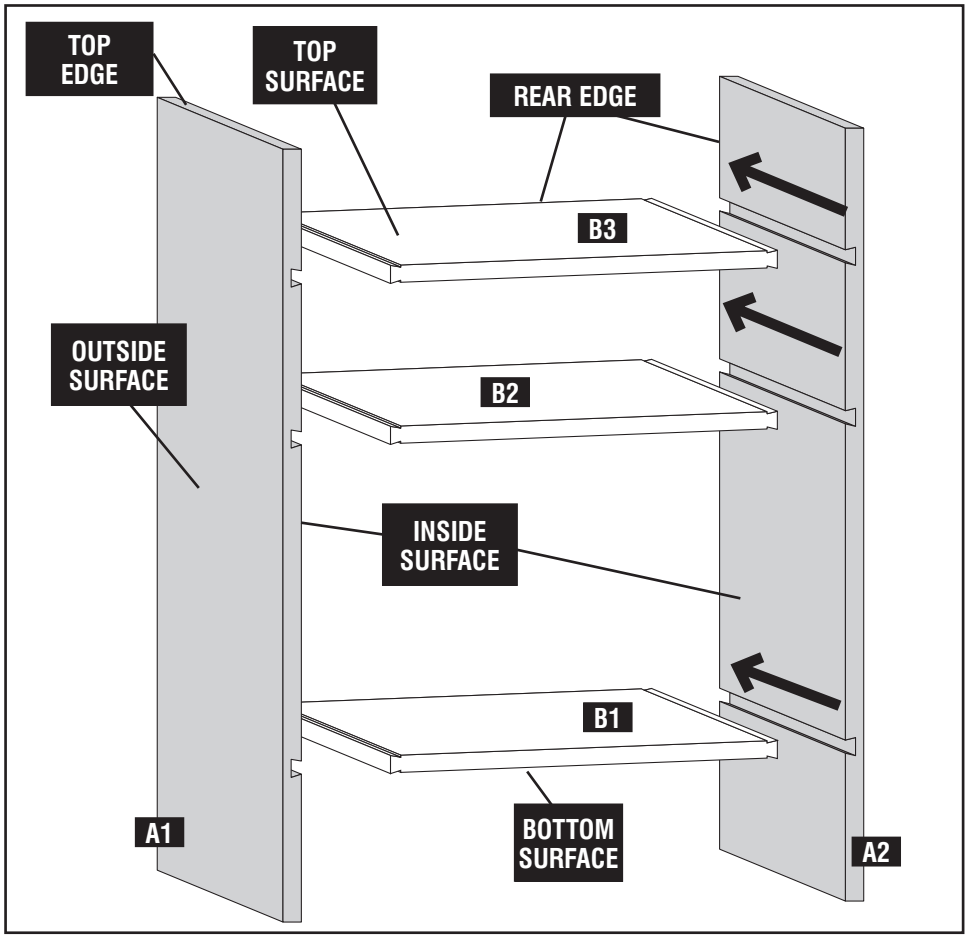

Fig. H3

For the shelves (B1, B2 or B3) Fig. H3, the rear edge is mounted vertically to the left of the jig in order to cut the tenon.

After making the cuts for the project as laid out in Fig. H3, the cuts will look like boards A1 and A2 in Fig. H4. The exaggerated tapers in the dado and on the tenon (Fig. H4) help show the direction of the taper.

CAPACITY NOTE: When making the dado cut, your boards need to be long enough to allow the workpiece to be clamped down. There must be at least 7" of material beyond the center of the dado, shown as "X" in Fig H5, to ensure good clamping. If you want the distance (X) to be smaller than 7" in your finished project, you can cut off the unwanted portion after the dado cut is made.

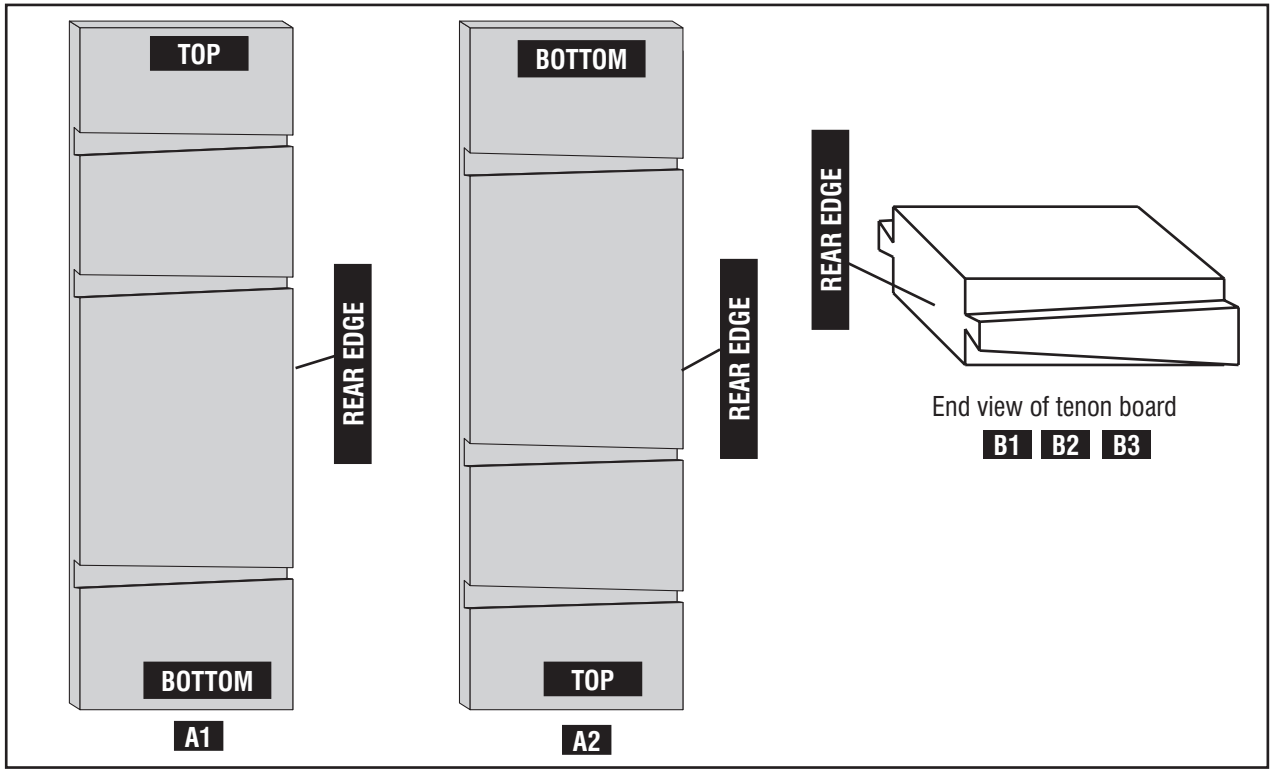

Fig. H4

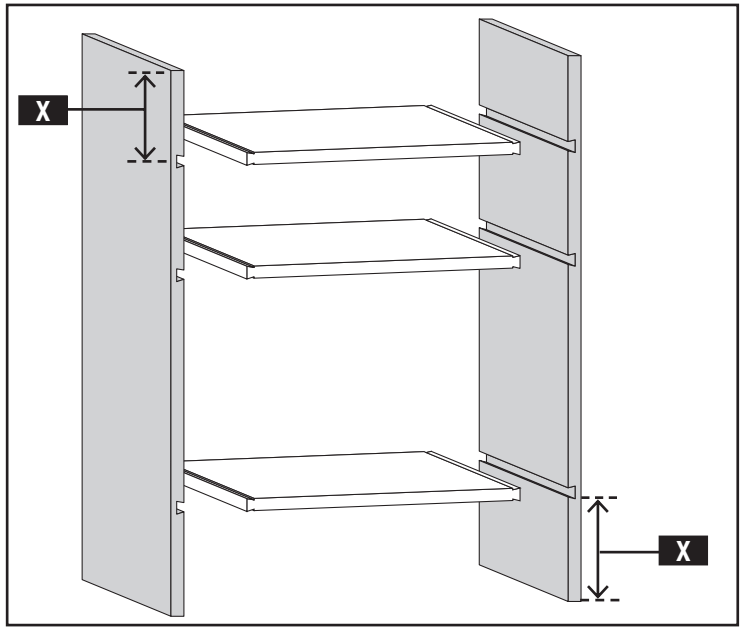

Fig. H5

SETTING UP AND MAKING THE CUT

OPERATIONAL NOTE: When cutting the sliding tapered dovetail joint, light and consistent pressure on the router is key to joint repeatability. Heavy or varied pressure may cause inconsistent joints. Also, before mounting the workpieces, be sure the jig base is free from wood chips or dust build-up. The boards to be cut must be flat against the jig base and edge guides to ensure joint accuracy and consistency.

CUTTING THE TENON BOARD

NOTE: Refer to the Sliding Tapered Dovetail template labels (at right) while using these instructions.

1. Insert C2 left and right stops (D) Fig. H6. Ensure that the spacers (SS) on both stops are positioned on the front of both stops as in Fig H6 (inset). Each spacer should be finger tightened to ensure it is positioned correctly.
2. Ensure that the template guide rods (Q) are raised above the base before mounting the template (G).
3. Select your router bit depth of cut from the chart below and select the corresponding template guide (G2, G3, G4 or G5) to install on the router before making the cut:

Approximate Depth of Cut	Template Guide
1/4"	G2
3/8"	G3
1/2"	G4
5/8"	G5

NOTE: Do not select a router bit depth (J) Fig. H8 that is greater than half your dado board thickness.

4. Install D4 Bit.
5. To set router bit depth:

* If using the standard half blind/sliding tapered template on the 16" OMNIJIG®, set the depth using the sliding tapered dovetail bit depth gauges at (L) Fig. H9. Pick which gauge (L) to use based on the corresponding router bit and template guide combination listed on the label at (K).

* If using the half blind/sliding tapered dovetail template on the 24" OMNIJIG®, then use depth gauges at (Y). These are the user defined gauges and need to be set according to the instructions found in the appendix. Raise the router bit before setting router on bit depth gauge. Slowly lower the router bit onto the gauge. Depth of cut is set when bit barely touches the gauge.

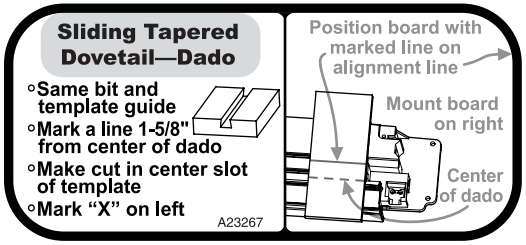

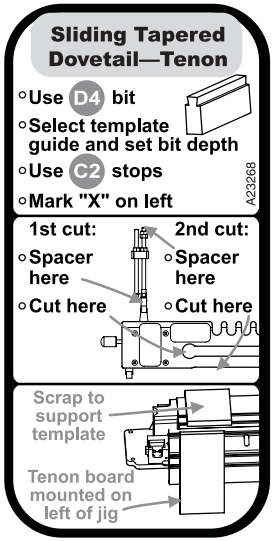

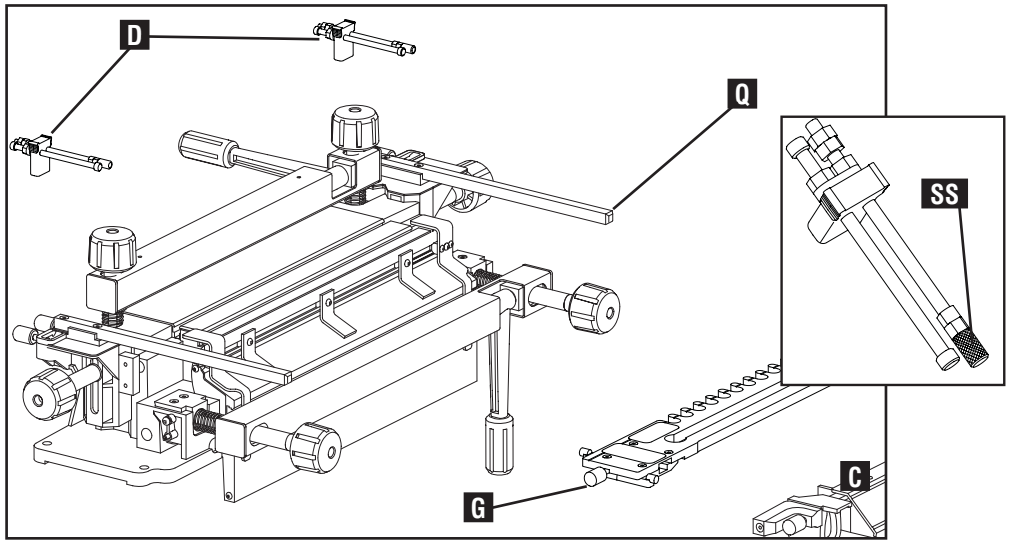

Fig. H6

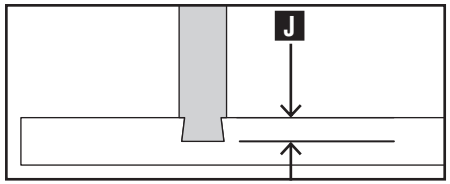

Fig. H8

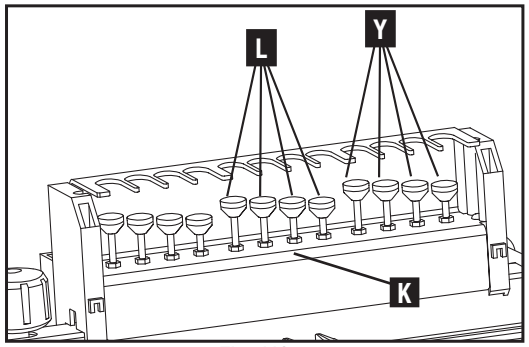

Fig. H9

6. As described in the "PROJECT LAYOUT" section, be sure the tenon board (shelf) (B) Fig. H10 is oriented with the "rear edge" of the shelf to the left before mounting.
7. Place the tenon board (shelf) vertically against the front of the jig base and mark the left side of the end grain as shown in Fig H10 with an "X". Line up the left edge of the board (B) with the left edge of the textured surface of the jig base (I).
8. If you intend making multiple cuts (ie, multiple shelves), it is recommended that you slide the left edge guide (M) Fig H10 over until it is flush with the left side of the tenon board and tighten it down to the front of the jig. The edge guide can then be used as a reference for the proceeding tenon board cuts.
9. Reposition the tenon board a little lower on the jig while you position horizontal scrap pieces left and right. While they should provide coverage to support the template, they should not be positioned so far forward as to interfere with the cutting of the tenon board. Be sure the underside of the template is tight against both pieces of wood, and pushed back to the left and right stops before tightening it down.
10. Reposition the tenon board so that it is flush with the jig base (N), template (G) and left edge guide (M), as shown in Fig. H11.
11. Add stabilizer bar (C) Fig. H6.

⚠WARNING: Before making any cuts, be sure you read your router owner's manual for safe operating instructions.

12. Place router into the template's center slot (O) Fig. H12 to the left of the tenon board (P). First make a shallow climb cut from left to right and then complete the cut along the front edge of the slot (P) from right to left.
13. Loosen and pull the stabilizer bar and template toward you along the template mounting rods (Q) Fig. H6, just enough to allow you to reposition the spacer on the template stops at the back of the jig.
14. Remove both knurled spacers (one shown at (R) Fig. H12 and H13) from both stops and replace them on back of each post for storage (as shown at (R) Fig. H14).
15. Push template and then stabilizer bar back against the stops and tighten them all.

⚠WARNING: Before making any cuts, be sure you read your router owner's manual for safe operating instructions.

16. Place router on edge of template (S) Fig. H14 and make cut on front edge of tenon board (T) from right to left and then clean the cut from left to right.

NOTE: Make sure the router base is maintained flat on the template as the cut is made.

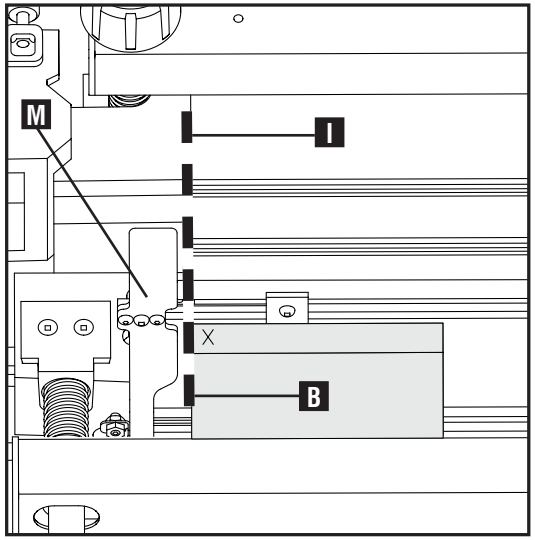

Fig. H10

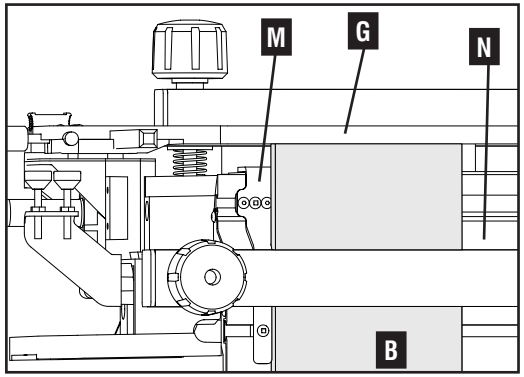

Fig. H11

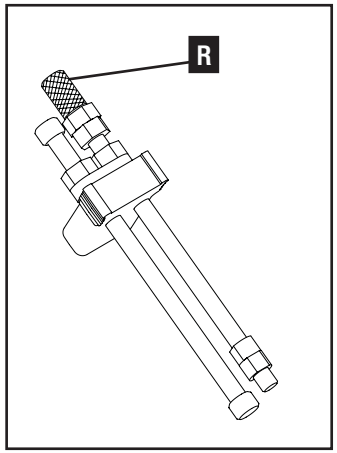

Fig. H13

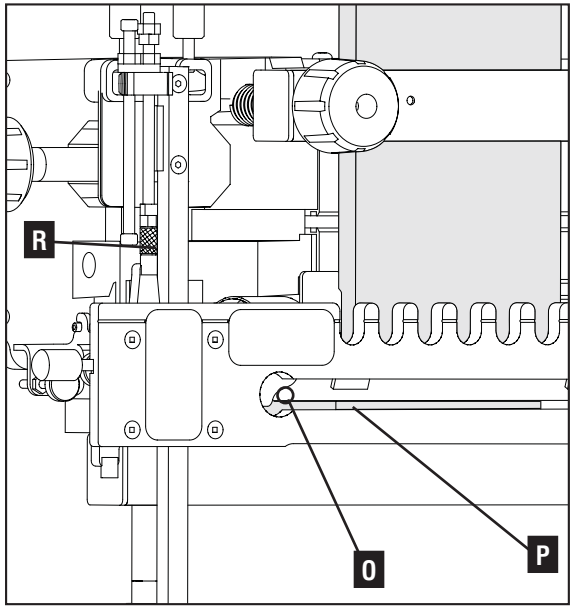

Fig. H12

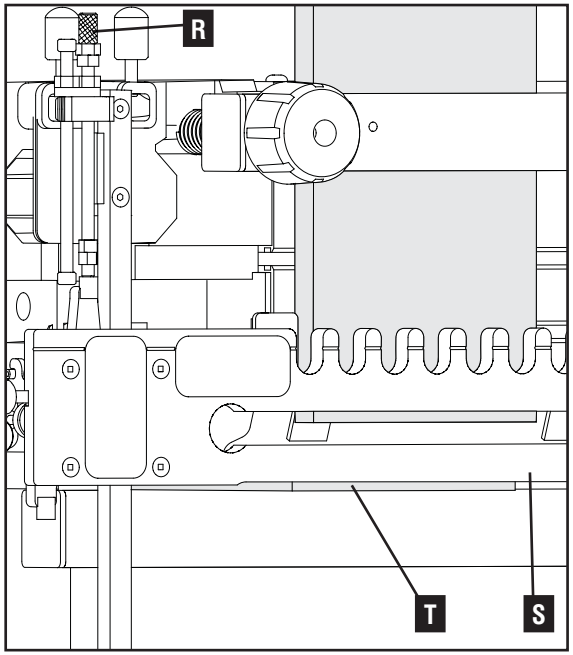

Fig. H14

CUTTING THE DADO BOARD

You will use the same stops, bit, template guide and depth of cut for the dado that was used for the tenon.

1. The dado board (vertical side panel, as shown at A1 or A2, Fig H3) will be mounted on the jig horizontally with the outside surface facing down and the rear edge aligned to the right of the jig base. With the board in this orientation, draw a straight line (U) Fig. H15 to mark the center of the dado. From this line, measure up the board 1-5/8" and draw another line (V) parallel to this first line.
2. Mount dado board (W) Fig H16 horizontally with the outside surface facing down and the rear edge to the right. Line up the rear edge of the dado board with the right edge of the textured surface of the jig base. Line up the pencil line mark (V) with the scribed line (Y) in the fixed fingers and line up the dado line (U) in the middle of the slot (Z). If you intend on making multiple cuts, it is recommended that you slide the right edge guide over until it is flush with the right side of the of the dado board and tighten it down. The edge guide can then be used as a reference for the proceeding dado board cuts. Remove the stabilizer bar from the jig if it interferes with the dado board.

⚠WARNING: If your board extends more than two feet beyond the front of the jig, be sure to use auxilliary supports to support the end of the workpiece.

3. **REMINDER:** Make sure there is a board of similar thickness clamped on the left side of the jig for stability. Also, be sure the template is flat on both boards and that the template lock knobs are tight.

⚠WARNING: Before making any cuts, be sure you read your router owner's manual for safe operating instructions.

4. To reduce wear on the dovetail bit and avoid excessive vibration, the bulk of the material must first be cut using a straight bit. The bit should be set to a slightly shallower depth than the dovetail bit, and stepped passes with the straight bit may be required for deeper depths of cut. Failure to follow this step may cause an ill fitting joint. (Router bit S1 combined with either template guide G1 or G2 will work for this. When using router bit S1, do not take off more than 1/4" of material in each pass.)
5. As you make the cut, guide the router from left to right along the back side (AA) Fig. H17 of the slot. Then, guide it along the front side (BB) of the slot from right to left. After removing the bulk of the material with a straight bit in this manner, make the final cut with the dovetail bit the same way.
6. Mark the left side of the dado with an "X" as shown in Fig H18. This will identify the entry point for the tenon board during assembly.

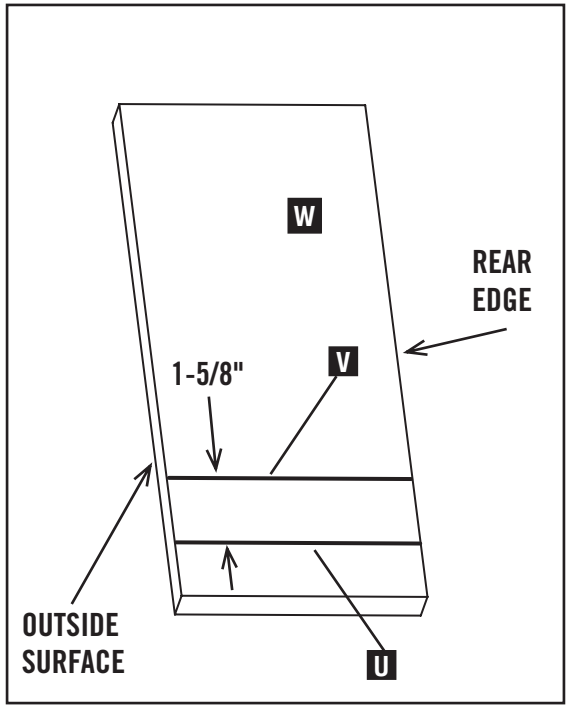

Fig. H15

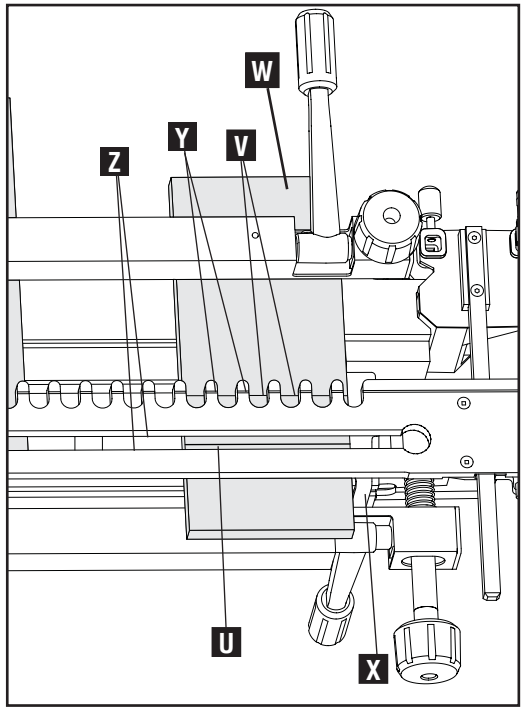

Fig. H16

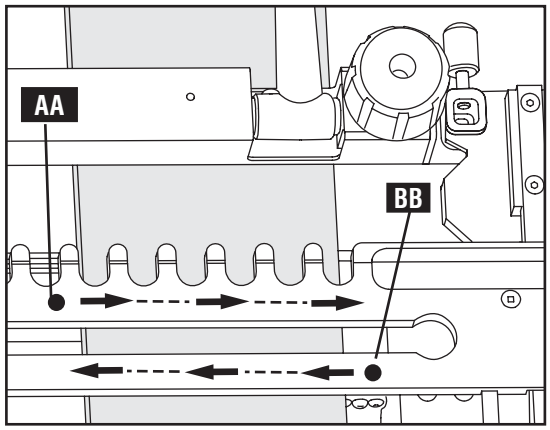

Fig. H17

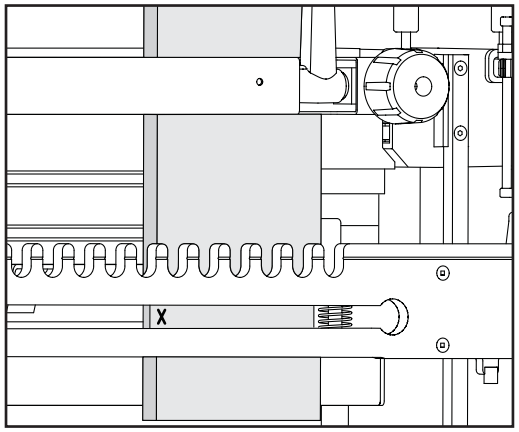

Fig. H18

ASSEMBLING THE BOARDS
Insert tenon board at “X" mark (Fig. H19) into dado’s “X" mark (Fig. H20) and slide in place. A blow with a rubber mallet may be needed for proper fitting.

FITTING THE JOINT

In the event that adjustments need to be made to achieve the desired joint fit, further instructions are given below:

TIGHTNESS: For joints that are deemed too tight, a shallower bit depth is needed to produce a looser joint. Decrease the bit depth accordingly and repeat the process using new boards.

LOOSENESS: For joints that are deemed too loose, a deeper bit depth is needed to produce a tighter joint. Increase the bit depth accordingly and repeat the process using new boards.

NOTE: Refer to the label on the front of the router bit depth pod located on the top of your jig for further guidance in tightening or loosening the joint.

TEAROUT: If you are getting excessive tearout (ragged edges), clamp scrap boards to both sides of either workpiece.
NOTE: If you clamp scrap boards before making your cuts, make sure the scrap to the left edge of the tenon board is the same width as the scrap (GG) Fig. H21 to the right edge of the dado board. This is to make sure the left edge of the tenon board and the right edge of the dado board are positioned the same distance from the ends of the template before the cuts are made.

CENTERING THE TENON: The tenon (CC) (side view at Fig. H22) might need to be centered on its board (DD), as shown. This is purely for aesthetic reasons; it will not significantly affect the strength of the joint.
To center the tenon (CC) on the board (DD) (as shown in Fig. H22), the C2 template stops will need to be adjusted. To do this:

1. Loosen the nut (EE) Fig H23 on the right side and move the post (FF) backward if the tenon is positioned toward the front of the board when in place on the jig.
2. Move the post forward if the tenon is located to the back of the board as you face it.
3. Tighten nut (EE) after positioning the post.

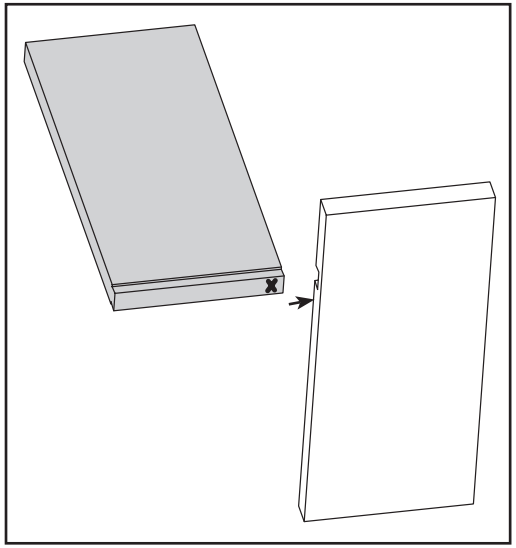

Fig. H19

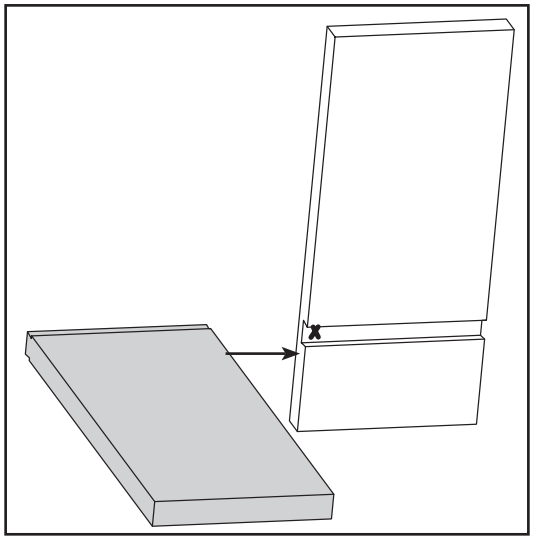

Fig. H20

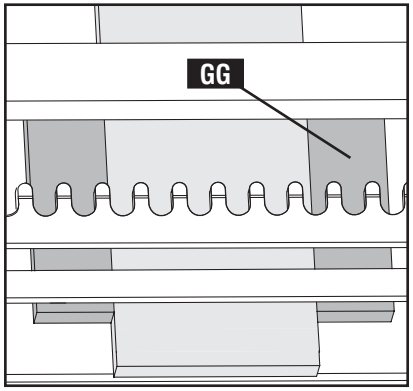

Fig. H21

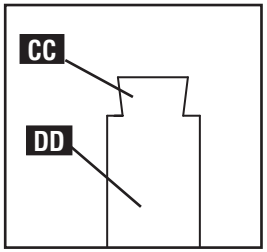

Fig. H22

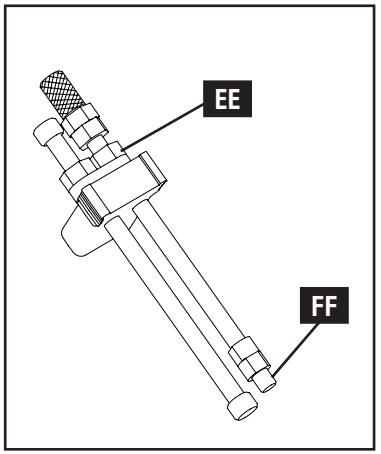

Fig. H23

Box Joints

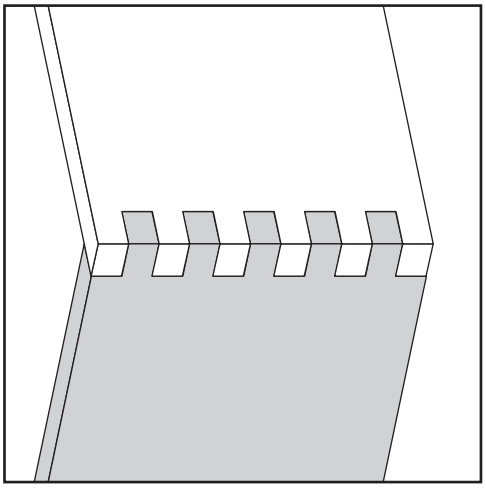

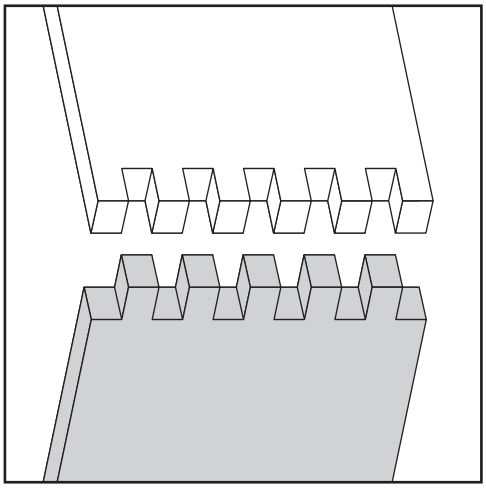

ITEMS NEEDED

Box joints are popular for specific projects such as jewelry boxes, blanket chests, workbenches or storage bins.

Box joints of variable finger widths can be made using an accessory box joint kit with the variable finger template (Fig. I1) or the miniature finger template (Fig. I2) on your OMNIJIG®. The accessory kit 77245 (Fig. I1) is used with the 16” and 24” variable finger templates (55161 or 77241). The accessory kit 55165 (Fig. I2) is used with the 16” and 24” mini finger templates (55166 or 77246).

The following chart shows the maximum board thickness (B) Fig. I3 and the minimum finger widths (A) that can be created with the kits:

	Minimum finger width (A)	Board thickness maximum (B)
Standard fingers	1/2"	1-1/4"
Mini fingers	5/16"	11/16"

NOTE: Box joint accessory kits 55165 and 77245 each include two offset double stops. These stops differ from the double stops used for other joinery applications, such as through and half-blind dovetails, although their function remains the same. The offset double stops for 77245 include a spacer (S) Fig. I1, that is located either on the front or back of the stop depending on the board's thickness to be cut. More detail is provided later in this chapter.

MAXIMUM BOARD WIDTH

If cutting box joints on the 16” or 24” variable finger template, the entire width of the jig can be used.

For the mini finger template, the maximum board width (C) is 10” for the 16” template and 18” for the 24” template.

NOTE: The fingers used to cut box joints on the miniature finger template are the same fingers used to cut half-blind dovetails, as shown in (D) Fig. I2.

OPTIMAL BOARD WIDTH

Because the fingers are adjustable, there is no suggested optimal board width (C). The template’s fingers can be arranged to produce whatever configuration is required.

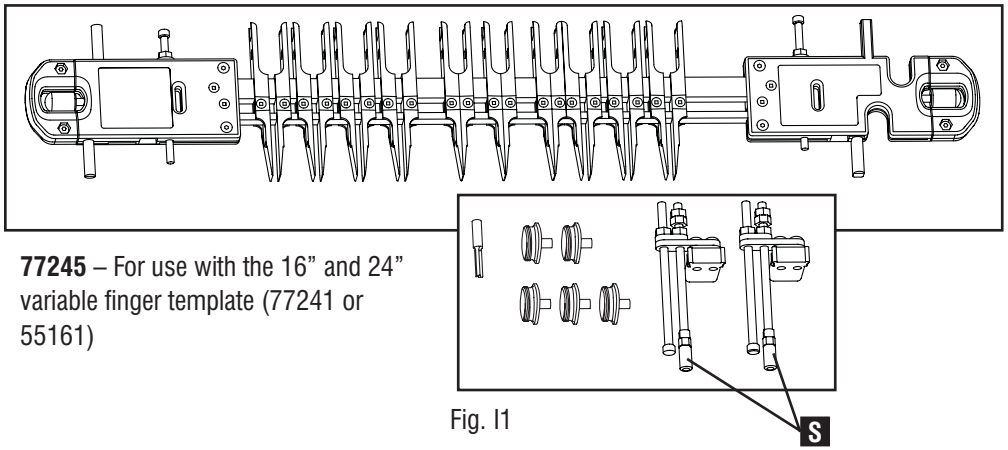

77245 – For use with the 16” and 24” variable finger template (77241 or 55161)

Fig. I1

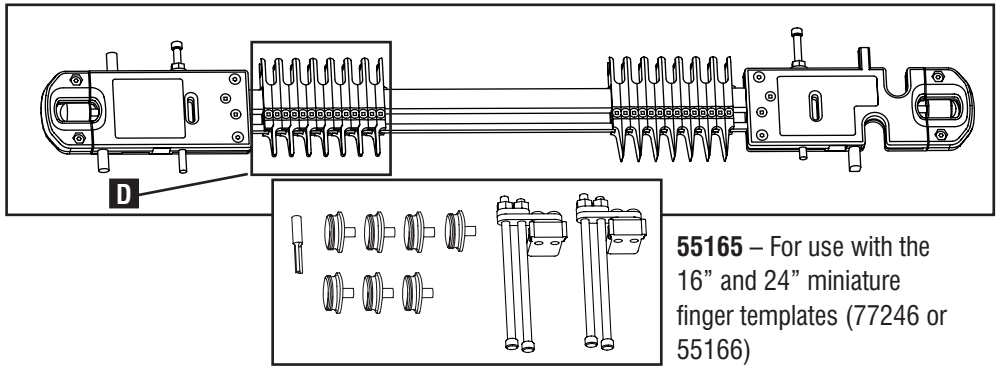

55165 – For use with the 16” and 24” miniature finger templates (77246 or 55166)

Fig. I2

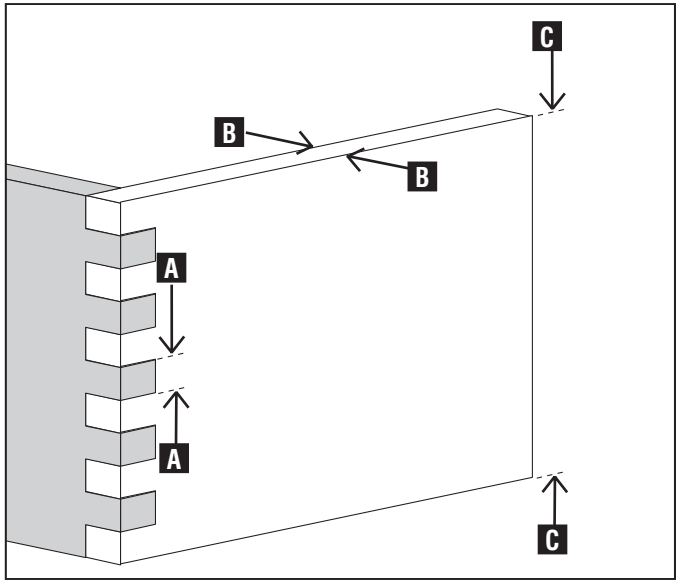

Fig. I3

NOTES ON CUTTING THE BOX JOINT

Before we get into the steps for cutting box joints, here are a few key points about using the box joint accessory kits with the appropriate templates:

For other applications such as through and half-blind dovetails, the position of the template or the router bit depth is used to control the tightness of the joint. For the box joint method, a series of template guides with slightly different outside diameters control the tightness of joint.

The box joint accessory kits include a Box Joint Setup Guide (Fig. I4). This card provides guidance for both making cuts and adjustments. The instructional labels on either end of the variable finger template and mini-template should therefore be ignored when cutting box joints.

Use stops (E) Fig. I6 labeled “BOX LEFT” and “BOX RIGHT” for the variable finger template. Use stops labeled “MINI-BOX LEFT” and “MINI-BOX RIGHT” for the mini finger template.

Both boards for box joints are cut in the vertical position. Be sure to mount scrap wood horizontally under the template on both left and right sides. These pieces should be the same thickness to ensure template flatness, but do not need to be the same thickness as the vertical board being cut.

The boards for your box joint will be referred to in this chapter as the "first board" cut (B1) (Fig. I5) and "second board" cut (B2) (Fig. I5). As shown in Fig. I5, B1 and B2 do not have to be the same thickness.

CUTTING THE JOINT

The instructions in this chapter for cutting a box joint using the accessory kit assume you have read the “BASIC OPERATIONS” chapter of this manual, as well as any chapter addressing usage of the variable finger templates.

Cutting instructions for the variable finger template are given below, while the differences in the steps when using the mini template follow.

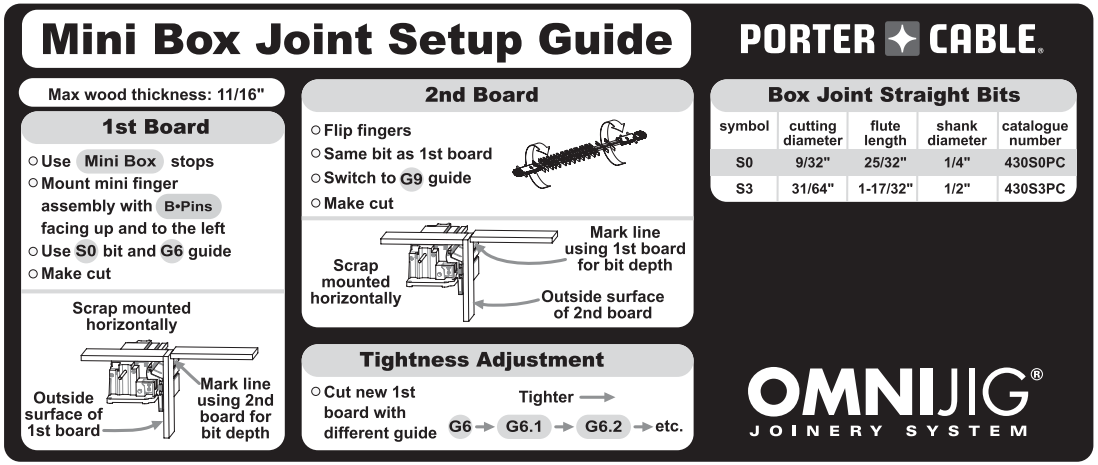

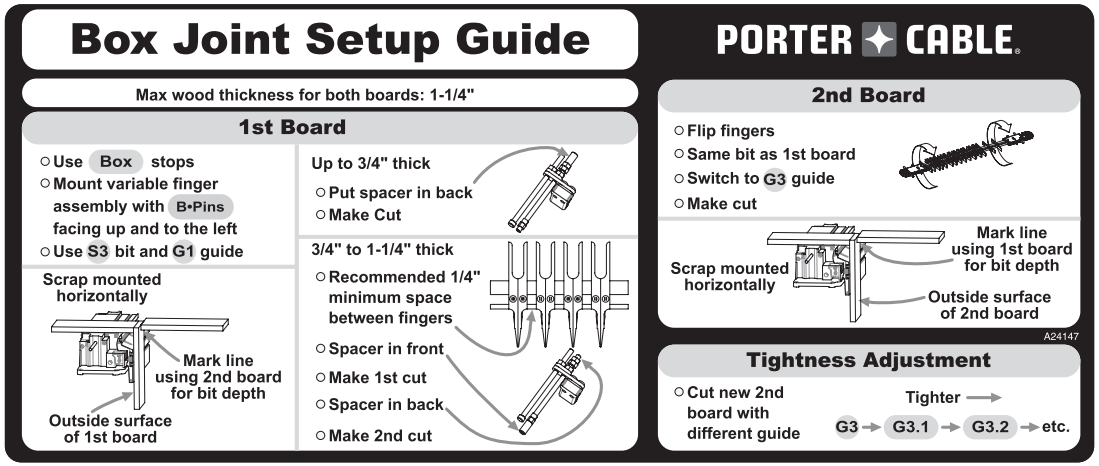

Fig. I4

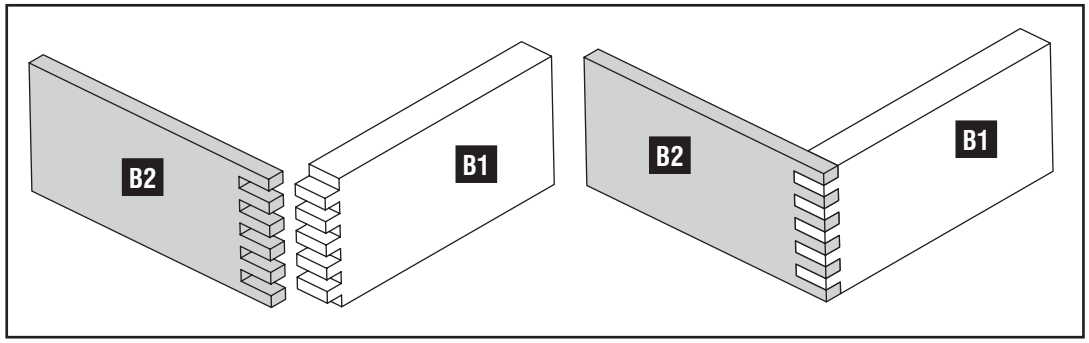

Fig. I5

VARIABLE FINGER TEMPLATE (55261 or 77241)

CUTTING THE FIRST BOARD (B1)

1. Mount horizontal scrap boards (F) Fig. I6 and template (G). Be sure the “B PINS” label (H) is to the left as you face the jig.
2. Vertically mount the first board to be cut (B1) Fig. I6 with the "outside surface" facing the jig. The board should be flush with the left edge guide (I) and tight against the underside of the template (G).

3. To reduce tearout, be sure the horizontal scrap (F) is pulled forward flush with the back of first board B1.

NOTE FOR DIFFERENT WOOD THICKNESSES:

* If the first board (B1) is less than or equal to 3/4" thick, the spacers (one shown at (J) Fig. I7) should be on the back of the stop as shown and the cut can be made in one pass.
* For wood thickness greater than 3/4", the cut needs to be made in two passes. The spacers (one shown at (K), Fig. I7) need to be located on the front of the stops for the first pass and on the back of the stops for the second pass. In each instance, be sure to re-position the template firmly against the stops and that the spacers are fully tightened on the stop threads.
* When cutting the second board (B2) with thickness greater than 3/4” this process does not apply and the board can be cut in a single setup.

4. Space the template's fingers in the desired configuration. Refer to Fig. I8 for an example, though even spacing of the fingers is not required.

NOTE: For wood greater than 3/4" thick, it is recomended the finger sets do not touch. The gap (L) Fig. I8 between each finger set should be at least 1/4". This gap assists you in making a second cut without accidentally gouging the path made by the first cut.

5. Use router bit S3 with template guide G1.

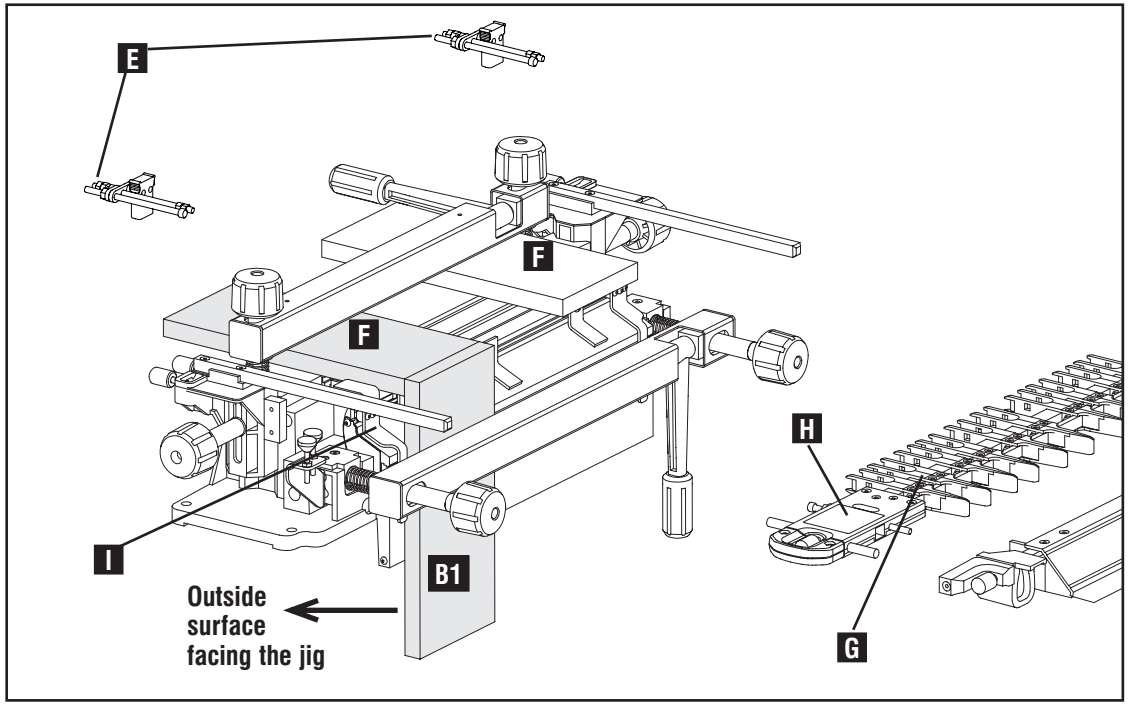

Fig. I6

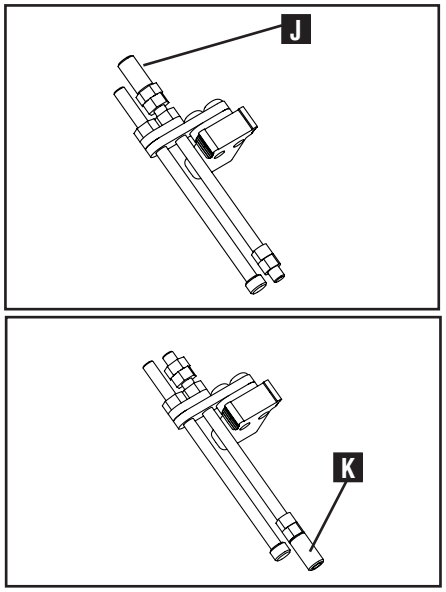

Fig. I7

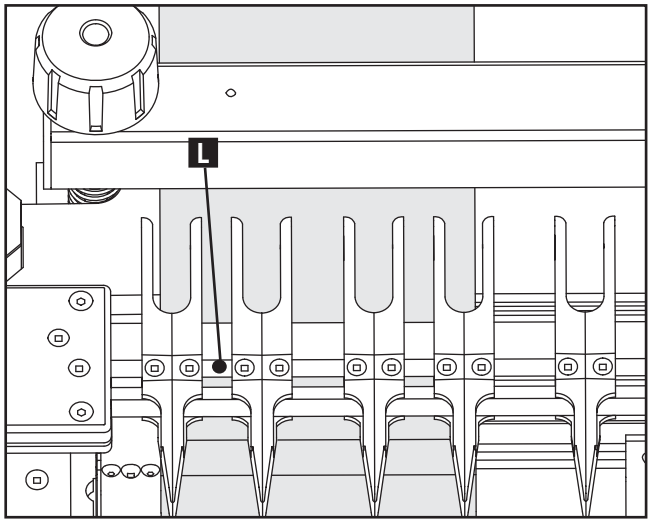

Fig. I8

6 Your router bit depth should match the thickness of the second board you are cutting, or B2 (Fig. I9). This is the board that will be joined with the first board, B1.

7. To set router bit depth, mark a line (M) Fig. I9 on B1 using the thickness of B2, as shown.

8. Place router on template and set router bit depth to this line (M).

⚠WARNING: Before making any cuts, be sure you read your router owner's manual for safe operating instructions.

9. To reduce tearout, the first pass (FIg. I10) of each area to be cut should be from right to left. Only a light cut is required, no deeper than a 1/4" for example. For proceeding cuts (Fig. I11), the router should enter from the left (N) and exit from the right (O). continue until cutting is complete and the final cut should resemble Fig. I13.

NOTE: Cut only between angled corners - do not cut between straight edges as shown in Fig. I12.

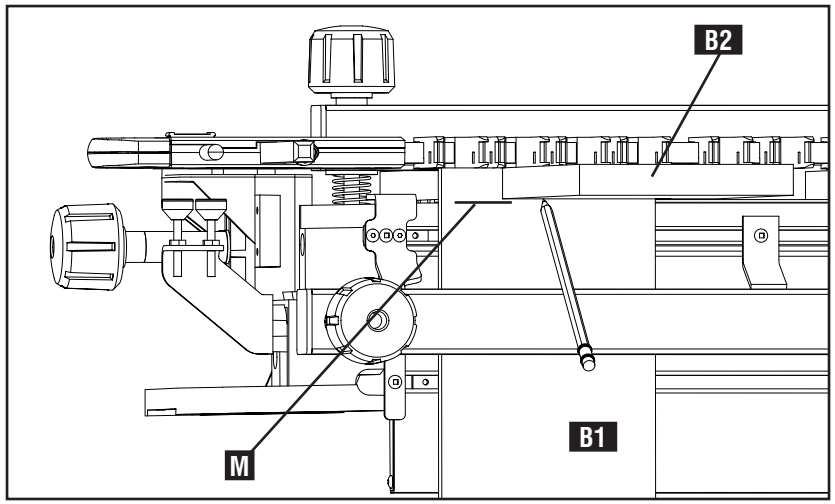

Fig. I9

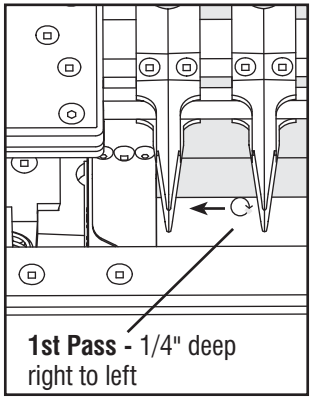

Fig. I10

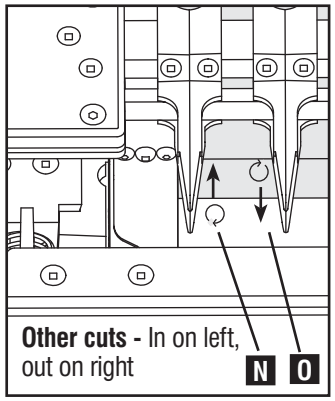

Fig. I11

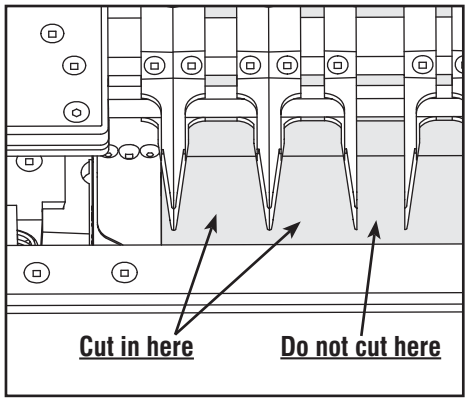

Fig. I12

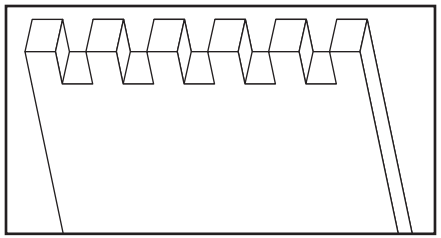

Fig. I13

CUTTING THE SECOND BOARD (B2)

1. Flip template over so the “B TAILS” label (P) Fig. I14 is on the left as you face the jig.
2. Remove the first board B1 and mount the second board B2, noting that the "outside surface" of second board B2 should now be facing away from the jig.(See Fig. I14) The horizontal scrap pieces (X) do not need to be moved and can remain in place to help reduce tearout when cutting the second board (B2).

NOTE: The second board can be cut in a single pass for any wood thickness since the changes required for wood greater than 3/4" thick with the first board B1 are not applicable. In addition, the spacers on the template stops that are an integral part of cutting the first board B1 do not apply here.

3. Set router bit depth to thickness of first board B1. Use previous instructions as a guide.
4. To cut second board (B2), use router bit (S3) with template guide G3.

⚠WARNING: Before making any cuts, be sure you read your router owner’s manual for safe operating instructions.

5. To reduce tearout, the first pass (Fig. I15) of each area to be cut should be from right to left. Only a light cut is required, no deeper than a 1/4" for example. For other cuts (Fig. I16), the router should enter from the left and exit from the right. Continue until cutting is complete and the final cut should resemble Fig. I17.

NOTE: Cut only between angled corners - do not cut between straight edges as shown in Fig. I18.

6. Remove B2 and fit boards B1 and B2 together. (See “ADJUSTING FOR TIGHTNESS OF FIT” in this chapter if your joint is too loose.)

MINIATURE TEMPLATE (77246 or 55166)

The procedure is the same as the variable finger template, with these exceptions:

- Use router bit S0 and template guide G6 to cut the first board, or B1.
- Use router bit S0 and template guide G9 to cut the second board, or B2.
- When vertically mounting the first board (B1), be sure the top of this piece is flush with the horizontal scrap board. This will need to be checked manually with a straight edge. (FIg. I19)
- Refer to **"MAXIMUM BOARD WIDTH"** section from earlier in chapter for direction on the fingers that should be used on mini template in order to cut a box joint.

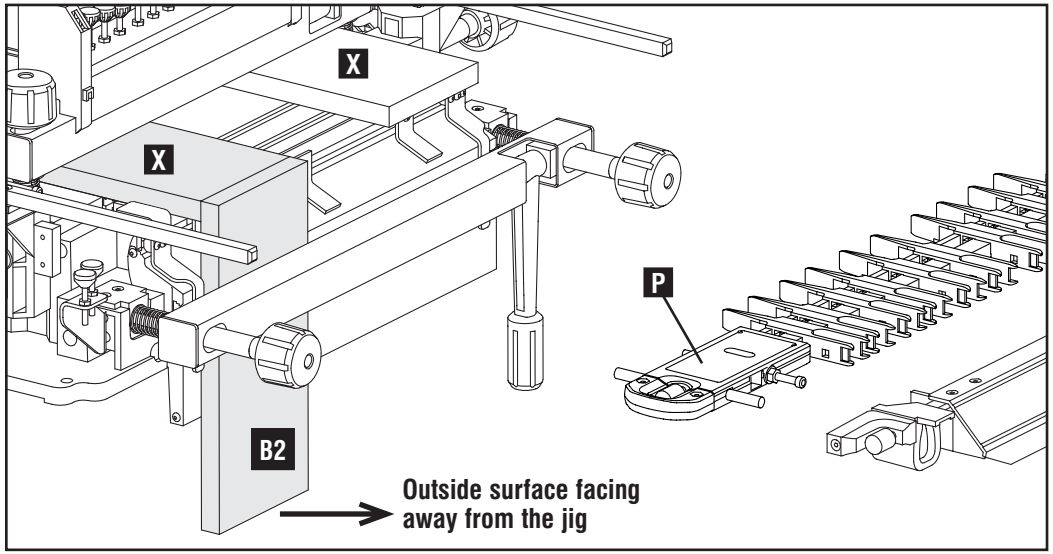

Fig. I14

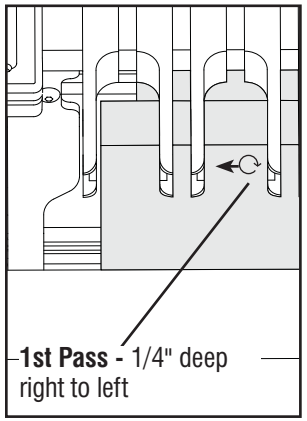

Fig. I15

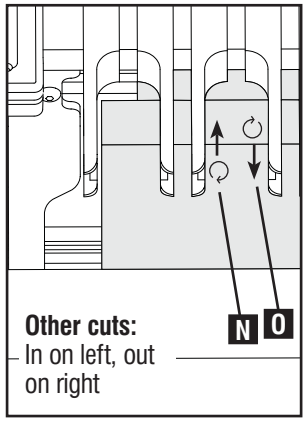

Fig. I16

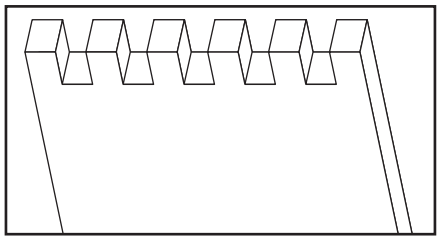

Fig. I17

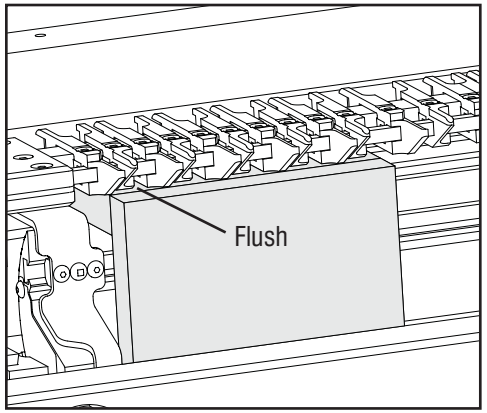

Fig. I19

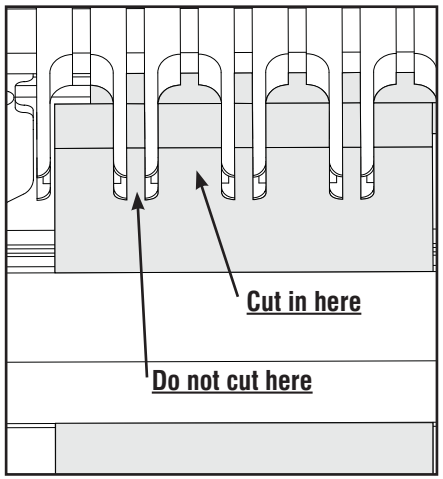

Fig. I18

ADJUSTING FOR TIGHTNESS OF FIT

VARIABLE FINGER TEMPLATE

If the resulting joint is too loose, you will need to re-cut B2 with a different template guide to tighten the joint. To do so:

1. Make sure template is mounted with “B TAILS” label to the left.
2. Mount a new second board (B2) with the same thickness as the board it is replacing.
3. Use the same router bit (S3).
4. Alternate template guides are included with the box joint accessory kit 77245 that enable the user to adjust the tightness of joint when using the variable finger template. As a reference, if only minor adjustments are percieved to be required, replace template guide G3 with either G3.1 or G3.2. However, if a more significant adjustment is needed, use G3.3, G3.4 or G3.5.
5. Make the cut as described earlier in this chapter and then review the joint.
   * **IF TOO LOOSE:** Try another template guide that is higher up the chart (Fig. I20). For example, if you used G3.2, you would want to use G3.3, G3.4 or G3.5.
   * **IF TOO TIGHT:** Try another template guide that is lower down the chart (Fig. I20). For example, if you used G3.3, you would want to use G3.2 or G3.1.

MINI FINGER TEMPLATE

If the resulting joint is too loose, you will need to re-cut B1 with a different template guide to tighten the joint. To do so:

1. Mount template with "B PINS" label facing up and to the left.
2. Mount a new first board (B1) with the same thickness as the board it is replacing.
3. Use S0 router bit.
4. Alternate template guides are included with the miniature box joint accessory kit 55165 that enable the user to adjust the tightness of joint when using the miniature finger template. As a reference, if only minor adjustments are percieved to be required, replace template guide G6 with either G6.1 or G6.2. However, if a more significant adjustment is needed, use G6.3, G6.4 or G6.5.

- Make the cut as described earlier in this chapter and then review the joint.
  * **IF TOO LOOSE:** Try another template guide that is higher up the chart (Fig. I21). For example, if you used G6.2, you would want to use G6.3, G6.4 or G6.5.
  * **IF TOO TIGHT:** Try another template guide that is lower down the chart (Fig. I21). For example, if you used G6.3, you would want to use G6.2 or G6.1.

PROUD AND RECESSED JOINTS (ADJUSTING DEPTH OF CUT)

The depth of cut may need to be adjusted to correct proud or recessed joints.

PROUD JOINTS: If the end grain of either board is proud (i.e. is protruding over the other board as shown in Fig. I22), then the depth of cut on that board needs to be shallower. When the joint is proud, the bit should be raised (Fig. I24) to reduce the depth of cut accordingly before re-cutting both boards.

RECESSED JOINTS: If the end grain on either board is recessed (or sunk below the other board as shown in Fig. I23), then the cut on that board needs to be deeper. When the joint is recessed, the bit should be lowered (Fig. I24) to increase the depth of cut accordingly before re-cutting both boards.

VARIABLE FINGER TEMPLATE

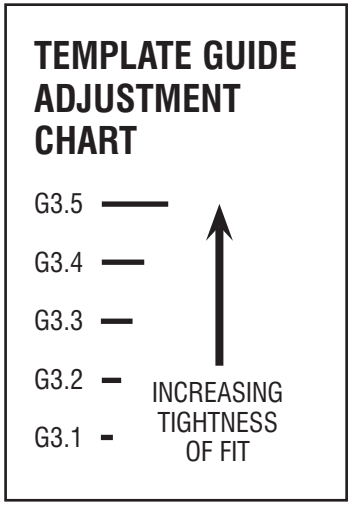

Fig. I20

MINI FINGER TEMPLATE

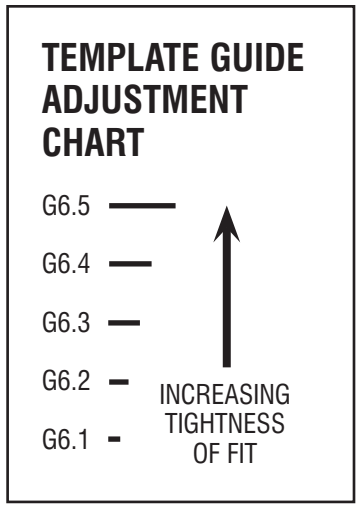

Fig. I21

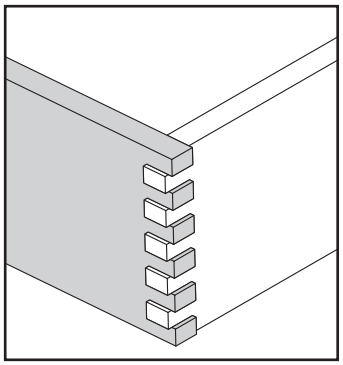

Fig. I22

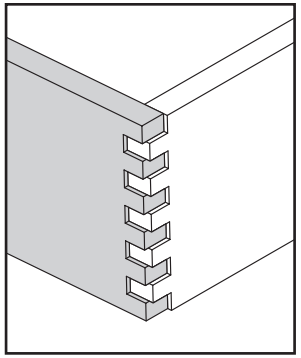

Fig. I23

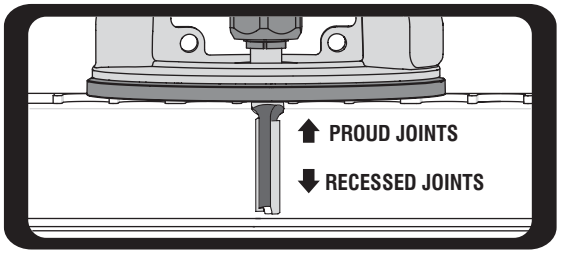

Fig. I24

SIZING YOUR OWN STOPS

The stops included with the OMNIJIG® JOINERY SYSTEM and other accessories are pre-set to be used with the parts they come packaged with.

However, as you expand your application capabilities, you may need to add additional stops associated with those applications. The Dovetail Setup Guide details which stops you are requried for each application.

Both pre-set and generic stops are available as accessories.

For the generic stops, use the tables at the right to make the measurements for the desired application.

After the joint is cut, if the stops need to be adjusted, follow the on board instructions for adjusting the stops (or refer to the appropriate chapter in the manual.)

DEPTH GAUGE SETTINGS (THROUGH AND MINIATURE THROUGH DOVETAILS)

The pre-set router bit depth gauges attached to left side of the OMNIJIG as shown in Fig. 1 can be adjusted to your own specific requirements. To adjust a gauge, loosen hex nut (C) and twist gauge to raise or lower. Tighten hex nut to hold measurement.

If you need to return any of the gauges back to factory settings for either the through or miniature through, set the distance A-B to 1-1/8" as shown in Fig. 3.

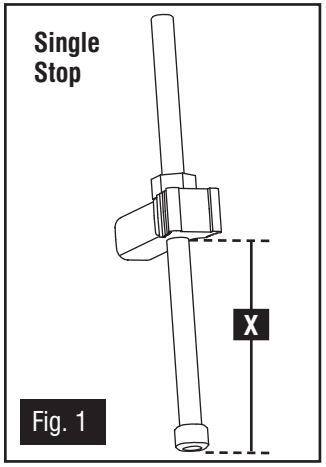

Fig. 1

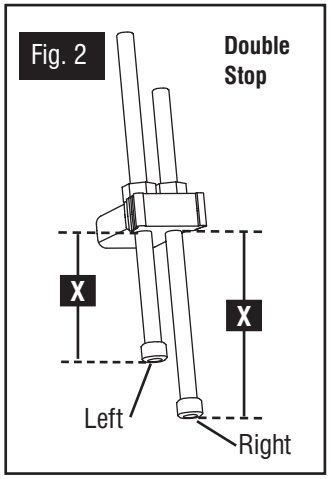

Fig. 2

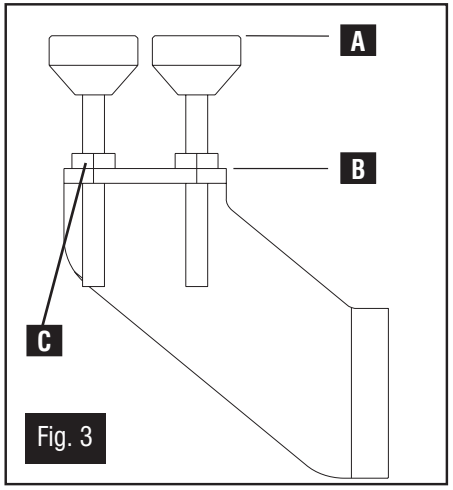

Fig. 3

GENERIC SINGLE STOP SETTINGS

Single stop label	Distance "X" (Fig. 1)	
	decimal	fractional
B1	2.357	2-23/64"
B2	2.860	2-55/64"

Table 1

GENERIC DOUBLE STOP SETTINGS

Double stop label	Distance "X" (Fig. 2)			
	Left		Right	
	decimal	*fractional*	*decimal*	*fractional*
A1	1.635	1-41/64"	2.805	1-13/16"
A2	1.749	1-3/4"	2.805	1-13/16"
A3	1.936	1-15/16"	2.805	1-13/16"
A4	1.946	1-61/64"	2.805	1-13/16"
A5	2.149	2-5/32"	2.805	1-13/16"
A6	2.704	2-45/64"	2.805	1-13/16"
A7	3.282	3-9/32"	3.454	3-29/64"
A8	3.413	3-13/32"	3.454	3-29/64"
A9	3.509	3-33/64"	3.454	3-29/64"
C1	not used		1.530	1-17/32"
C2	3.329	3-21/64"	3.548 (With spacer in front position)	3-35/64
BOX	2.805	2-13/16"	3.340 (With spacer in front position)	3-11/32"
MINI BOX	3.472	3-15/32"	3.566	3-9/16"

Table 2

ROUTER BIT DEPTH POD SETTINGS

The OMNIJIG® comes standard with a router bit depth pod (detail shown below in Fig. 4.) The four left and four middle gauges of the router bit depth pod that is standard with the 16" OMNIJIG® are set as shown in Tables 3 and 4. The four left and four middle gauges of the depth pod that comes with the 24" OMNIJIG® are set as shown in Tables 5 and 6. The settings are different because each OMNIJIG® comes with different templates.

For each model, the four right side gauges are not pre-set to any certain distance. As you add capacity to your OMNIJIG® system, you can use Tables 3-7 to set any or all of the user defined third set of gauges for additional applcations.

To size a gauge, measure from the top of the router sub-base rest at (A) Fig. 2 to the top of the corresponding gauge (B) below. To adjust a gauge, loosen hex nut (C) and twist gauge to raise or lower. Tighten hex nut to hold measurement.

When cutting miniature variable-spaced half-blind joints, refer to see Table 7 to set the user defined gauges to the measurements shown.

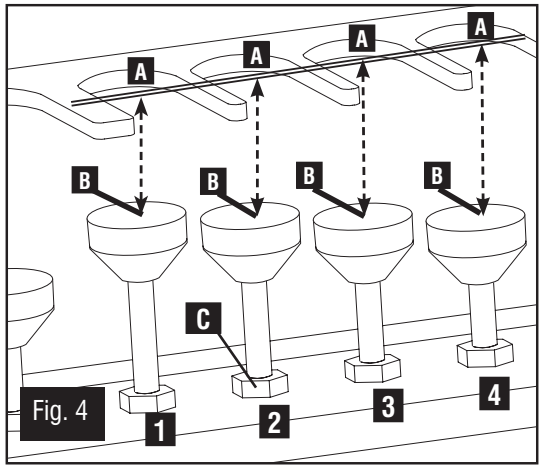

Fig. 4

SINGLE-PASS HALF-BLIND/SLIDING TAPERED DOVETAIL TEMPLATES *(16" - 55168; 24" - 77248)*

TABLE 3: Single-Pass Half-Blind Dovetail Bit Depth (with D4 bit)

Apprx. Bit Depth	Template Guide	A-B Distance (Fig. 1)
1. 1/4"	G2	0.775"
2. 3/8"	G3	0.900"
3. 1/2"	G4	1.025"
4. 5/8"	G5	1.150"

TABLE 4: Sliding Tapered Bit Depth (with D4 bit)

Apprx. Bit Depth	Template Guide	A-B Distance (Fig. 1)
1. 1/4"	G2	.713"
2. 3/8"	G3	.838"
3. 1/2"	G4	.963"
4. 5/8"	G5	1.088"

VARIABLE FINGER TEMPLATES *(16" - 55161; 24" - 77241)*

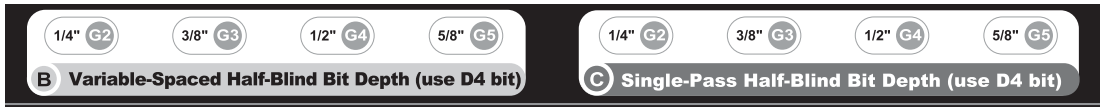

TABLE 5: Variable-Spaced Half-Blind Dovetail Bit Depth (with D4 bit)

Apprx. Bit Depth	Template Guide	A-B Distance (Fig. 1)
1. 1/4"	G2	1.075"
2. 3/8"	G3	1.200"
3. 1/2"	G4	1.325"
4. 5/8"	G5	1.450"

TABLE 6: Single-Pass Half-Blind Dovetail Bit Depth (with D4 bit) *

Apprx. Bit Depth	Template Guide	A-B Distance (Fig. 1)
1. 1/4"	G2	1.030"
2. 3/8"	G3	1.155"
3. 1/2"	G4	1.280"
4. 5/8"	G5	1.405"

TABLE 7: Miniature Variable-Spaced Half-Blind Bit Depth (24" - 77246; 16" - 55166)

Approx. Bit Depth	Router Bit	Template Guide	A-B Distance (Fig. 1)
1. 1/4"	D0	G2	0.957"
2. 3/8"	D1	G3	1.082"
3. 1/2"	D1	G4	1.207"
4. 5/8"	D2	G5	1.332"

TROUBLESHOOTING

For assistance with your tool, visit our website at www.deltaportercable.com for a list of service centers, or call the PORTER-CABLE Customer Care Center at (888) 848-5175.

SERVICE

REPLACEMENT PARTS

Use only identical replacement parts. For a parts list or to order parts, visit our website at servicenet.deltaportercable.com. You can also order parts from your nearest PORTER-CABLE Factory Service Center or PORTER-CABLE Authorized Warranty Service Center. Or, you can call our Customer Care Center at (888) 848-5175.

SERVICE AND REPAIRS

All quality tools will eventually require servicing and/or replacement of parts. For information about PORTER-CABLE, its factory service centers or authorized warranty service centers, visit our website at www.deltaportercable.com or call our Customer Care Center at (888) 848-5175. All repairs made by our service centers are fully guaranteed against defective material and workmanship. We cannot guarantee repairs made or attempted by others.

You can also write to us for information at PORTER-CABLE, 4825 Highway 45 North, Jackson, Tennessee 38305 - Attention: Product Service. Be sure to include all of the information shown on the nameplate of your tool (model number, type, serial number, etc.).

ACCESSORIES

A complete line of accessories is available from your PORTER-CABLE Factory Service Center or a PORTER-CABLE Authorized Warranty Service Center. Please visit our Web Site www.deltaportercable.com for a catalog or for the name of your nearest supplier.

⚠WARNING: Since accessories other than those offered by Porter-Cable have not been tested with this product, use of such accessories could be hazardous. For safest operation, only Porter-Cable recommended accessories should be used with this product.

THREE YEAR LIMITED WARRANTY

PORTER-CABLE will repair, without charge, any defects due to faulty materials or workmanship for three years from the date of purchase. This warranty does not cover part failure due to normal wear or tool abuse. For further detail of warranty coverage and warranty repair information, visit www.deltaportercable.com or call (888) 848-5175. This warranty does not apply to accessories or damage caused where repairs have been made or attempted by others. This warranty gives you specific legal rights and you may have other rights which vary in certain states or provinces.

In addition to the warranty, **PORTER-CABLE** tools are covered by our:

1 YEAR FREE SERVICE: PORTER-CABLE will maintain the tool and replace worn parts caused by normal use, for free, any time during the first year after purchase.

90 DAY MONEY BACK GUARANTEE: If you are not completely satisfied with the performance of your PORTER-CABLE Power Tool, Laser, or Nailer for any reason, you can return it within 90 days from the date of purchase with a receipt for a full refund – no questions asked.

LATIN AMERICA: This warranty does not apply to products sold in Latin America. For products sold in Latin America, see country specific warranty information contained in the packaging, call the local company or see website for warranty information.

To register your tool for warranty service visit our website at www.deltaportercable.com.

WARNING LABEL REPLACEMENT

If your warning labels become illegible or are missing, call (888) 848-5175 for a free replacement.

The gray & black color scheme is a trademark for PORTER-CABLE Power Tools and Accessories. The following are also trademarks for one or more PORTER-CABLE and Delta products: L'agencement de couleurs grise et noire est une marque de commerce des outils électriques et accessoires PORTER-CABLE. Les marques suivantes sont également des marques de commerce se rapportant à un ou plusieurs produits PORTER-CABLE ou Delta : El gráfico de color negro y gris es una marca registrada para las herramientas eléctricas y los accesorios PORTER-CABLE. Las siguientes también son marcas comerciales para uno o más productos de PORTER-CABLE y Delta: 2 BY 4®, 890™, Air America®, AIRBOSS™, Auto-Set®, B.O.S.S.®, Bammer®, Biesemeyer®, Builders Saw®, Charge Air®, Charge Air Pro®, CONTRACTOR SUPERDUTY®, Contractor's Saw®, Delta®, DELTA®, Delta Industrial®, DELTA MACHINERY & DESIGN™, Delta Shopmaster and Design®, Delta X5®, Deltacraft®, DELTAGRAM®, Do It. Feel It.®, DUAL LASERLOC AND DESIGN®, EASY AIR®, EASY AIR TO GO™, ENDURADIAMOND®, Ex-Cell®, Front Bevel Lock®, Get Yours While the Sun Shines®, Grip to Fit®, GRIPVAC™, GTF®, HICKORY WOODWORKING®, Homecraft®, HP FRAMER HIGH PRESSURE®, IMPACT SERIES™, Innovation That Works®, Jet-Lock®, Job Boss®, Kickstand®, LASERLOC®, LONG-LASTING WORK LIFE®, MAX FORCE™, MAX LIFE®, Micro-Set®, Midi-Lathe®, Monsoon®, MONSTER-CARBIDE™, Network®, OLDHAM®, OMNIJIG®, PC EDGE®, Performance Crew™, Performance Gear®, Pocket Cutter®, Porta-Band®, Porta-Plane®, Porter Cable®, PORTER-CABLE Professional Power Tools®, Powerback®, POZI-STOP™, Pressure Wave®, PRO 4000®, Proair®, Quicksand and Design®, Quickset II®, QUIET DRIVE TECHNOLOGY™, QUIET DRIVE TECHNOLOGY AND DESIGN™, Quik-Change®, QUIK-TILT®, RAPID-RELEASE™, RAZOR®, Redefining Performance®, Riptide®, Safe Guard II®, Sand Trap and Design®, Sanding Center®, Saw Boss®, Shop Boss®, Sidekick®, Site Boss®, Speed-Bloc®, Speedmatic®, Stair Ease®, Steel Driver Series®, SUPERDUTY®, T4 & DESIGN®, THE AMERICAN WOODSHOP®, THE PROFESSIONAL EDGE®, Thin-Line®, Tiger Saw®, TIGERCLAW®, TIGERCLAW AND DESIGN®, Torq-Buster®, TRU-MATCH®, T-Square®, Twinlaser®, Unifence®, Uniguard®, UNIRIP®, UNISAW®, UNITED STATES SAW®, Veri-Set®, Versa-Feeder®, VIPER®, VT™, VT RAZOR™, Water Driver®, WATER VROOM®, Waveform®, Whisper Series®, X5®, YOUR ACHIEVEMENT. OUR TOOLS.®

Trademarks noted with ® are registered in the United States Patent and Trademark Office and may also be registered in other countries. Other trademarks may apply. Les marques de commerce suivies du symbole ® sont enregistrées auprès du United States Patent and Trademark Office et peuvent être enregistrées dans d'autres pays. D'autres marques de commerce peuvent également être applicables. Las marcas comerciales con el símbolo ® están registradas en la Oficina de patentes y marcas comerciales de Estados Unidos (United States Patent and Trademark Office), y también pueden estar registradas en otros países. Posiblemente se apliquen otras marcas comerciales registradas.

PORTER CABLE®

4825 Highway 45 North
Jackson, TN 38305
(888)-848-5175
www.deltaportercable.com

PORTER CABLE®

4825 Highway 45 North Jackson, TN 38305

1.888.848.5175
deltaportercable.com/jigs

©Copyright 2007 PORTER-CABLE. All rights reserved.